# Replaces Toro Greensmaster 3250-D Parts

*Traction Unit - Model 04383 & 04384*
*Groomer - Model 04490*

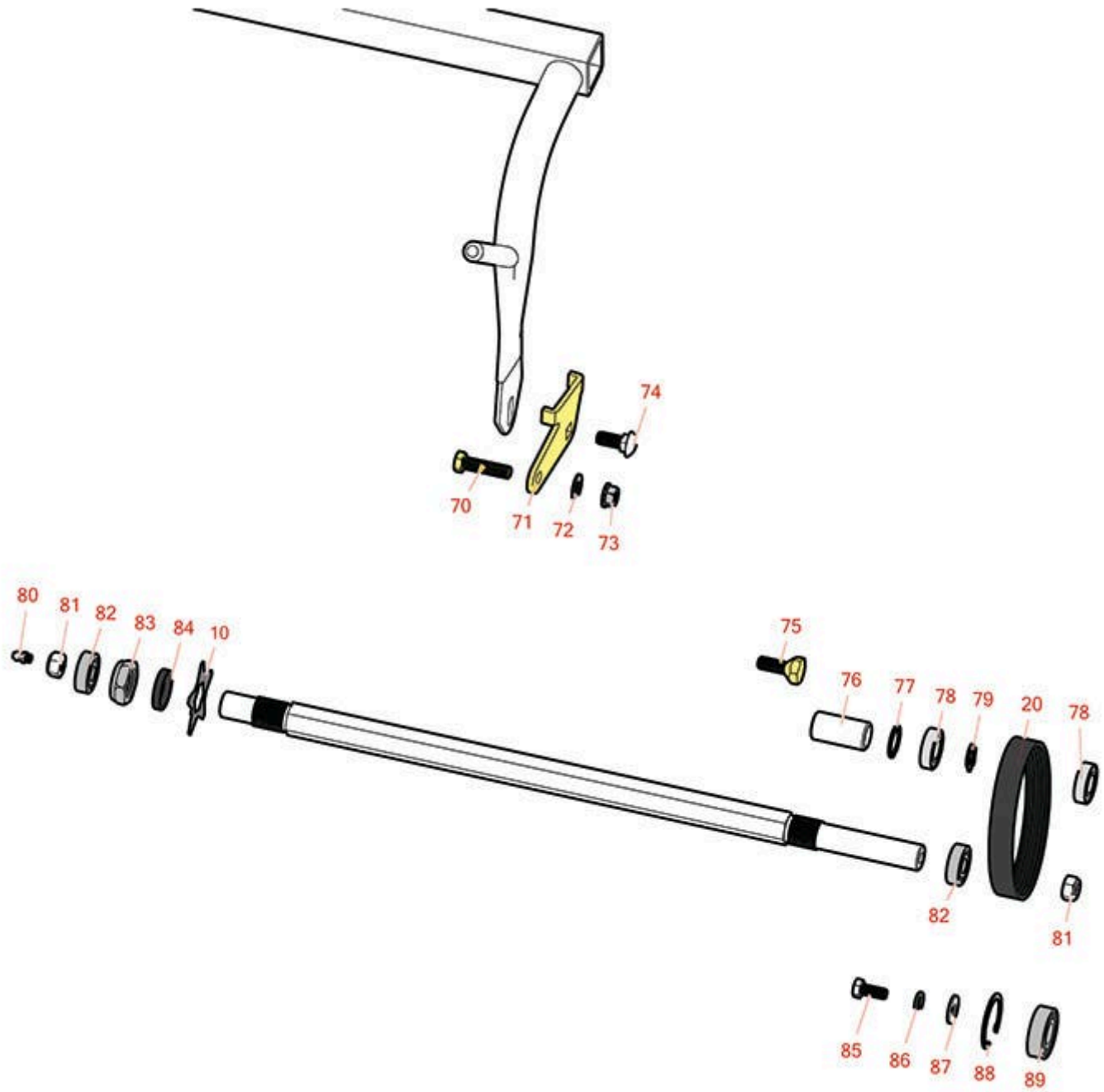


All original equipment manufacturers names and part numbers are used for identification purposes only, and we are in no way implying that our products are original equipment parts. Prices subject to change without notice.

# Replaces Toro Greensmaster 3250-D Parts

*Traction Unit - Model 04383 & 04384*
*Groomer - Model 04490*

| Item No | R&R Part No. | OEM Part No. | Description | Qty Req | Price Each | Order Quantity |
|---|---|---|---|---|---|---|
| ***Blades*** | | | | | | |
| 10 | **R95-5719** | 95-5719 | Blade - Groomer | 41 | **0.93** | |
| ***Belts*** | | | | | | |
| 20 | **R95-0728** | 95-0728 | Belt - Groomer | 3 | **11.15** | |
| ***Other Parts Available*** | | | | | | |
| 70 | **R323-8** | 01-150-0060, 01-178-0612, 20-49-AD, 20-49-AGD, 323-8, 3273-41, 908036P | Bolt - Hex HD 3/8-16 x 1-1/2 GR8 | 4 | **1.70** | |
| 71 | **R99-4149** | 99-4149 | Bracket - Pull Link, - LH | 2 | **17.30** | |
| 71 | **R99-4148** | 99-4148 | Bracket - Pull Link - RH | 2 | **17.30** | |

All original equipment manufacturers names and part numbers are used for identification purposes only, and we are in no way implying that our products are original equipment parts. Prices subject to change without notice.

# Replaces Toro Greensmaster 3250-D Parts

*Traction Unit - Model 04383 & 04384*
*Groomer - Model 04490*

| Item No | R&R Part No. | OEM Part No. | Description | Qty Req | Price Each | Order Quantity |
|---|---|---|---|---|---|---|
| 72 | **R453011** | 01-166-0100, 01-166-0120, 01-166-0270, 01-166-0500, 01-166-0600, 01-166-0620, 132-4593, 2356-3, 237-12, 24-10-AD, 24-11-AD, 24-11-BD, 24-12-AD, 24-12-BD, 30-9310, 32-8190, 3256-24, 3256-3, 3256-36, 3256-4, 453011, 47-9950, 48-9220, 513458, 7-0052 | Washer - Flat 3/8 SAE Y/Zinc | 4 | **0.12** | |
| 73 | **R3296-39** | 32127-25, 32128-36, 3290-357, 3296-17, 3296-22, 3296-39, 915663P, 99-7443 | Locknut - 3/8-16 Nylon | 4 | **1.60** | |
| 74 | **R3231-2** | 01-157-0170, 01-173-0608, 3231-2, 3231-22, 3231-28, 900063P | Bolt - Carriage 3/8-16 x 1 | 4 | **0.61** | |
| 74 | **R3231-22** | 900234P | Bolt - Carriage 3/8-16 x 1 | 4 | **0.59** | |
| 75 | **R95-0745** | 95-0745 | Bolt - Tapered | 6 | **10.20** | |

All original equipment manufacturers names and part numbers are used for identification purposes only, and we are in no way implying that our products are original equipment parts. Prices subject to change without notice.

# Replaces Toro Greensmaster 3250-D Parts

*Traction Unit - Model 04383 & 04384*
*Groomer - Model 04490*

| Item No | R&R Part No. | OEM Part No. | Description | Qty Req | Price Each | Order Quantity |
|---|---|---|---|---|---|---|
| 76 | **R94-4507** | 94-4507 | Coupling - Reel | 3 | **11.15** | |
| 77 | **R32120-37** | 32120-37 | Ring - Internal Retaining Reel | 3 | **2.05** | |
| 78 | **R251-336** | 251-336 | Bearing | 4 | **26.95** | |
| 79 | **R32151-12** | 32151-12 | Ring - Retaining 11/16 | 6 | **1.45** | |
| 80 | **R302-5** | 21-6010, 302-11, 302-37, 302-47, 302-5, 302-57, 302-58, 302-6, 31-0300, 32-9660, 60-0800, 62-3880, 92-4181 | Fitting - Grease | 3 | **0.32** | |
| 80 | **R700414** | 302-11, 302-19, 302-4, 32-8170 | Zerk - Grease 1/4-28 45 Deg | 3 | **0.90** | |
| 81 | **R33025-00** | 33025-00 | Locknut - 10mm x 1.5 Jam | 6 | **0.61** | |
| 82 | **R95-0707** | 95-0707 | Bearing - Self Aligning | 4 | **27.75** | |
| 83 | **R32127-46** | 32127-46, 3296-60 | Locknut | 2 | **3.15** | |
| 84 | **R70-1350** | 70-1350 | Spacer - 1/4 Fits Groomer Shaft | 84 | **0.93** | |
| 85 | **R66-3160** | 33114-020, 43-0110, 48-7710, 66-3160 | Bolt - Flanged Hex HD | 3 | **0.49** | |

All original equipment manufacturers names and part numbers are used for identification purposes only, and we are in no way implying that our products are original equipment parts. Prices subject to change without notice.

# Replaces Toro Greensmaster 3250-D Parts

*Traction Unit - Model 04383 & 04384*
*Groomer - Model 04490*

| Item No | R&R Part No. | OEM Part No. | Description | Qty Req | Price Each | Order Quantity |
|---|---|---|---|---|---|---|
| 86 | **R3253-4** | 01-166-0110, 01-166-0510, 23-10-GD, 24-7170, 30-8520, 3253-4, 48-9350, 48-9360, 48-9570, 68-9420, 99-7577 | Washer - Lock 5/16 Zinc | 3 | **0.15** | |
| 87 | **R88-7200** | 88-7200 | Washer - Flat | 3 | **2.70** | |
| 88 | **RA170040** | 32120-42, 52-6640, 74-9900, SG427625 | Ring - Snap | 3 | **0.81** | |
| 89 | **R38-7820** | 100-1048, 251-277, 251-5, 38-7820 | Bearing - Ball | 3 | **5.45** | |
| 89 | **R343667** | 109966, 251-6, 38-7820 | Bearing - Ball | 3 | **10.15** | |

All original equipment manufacturers names and part numbers are used for identification purposes only, and we are in no way implying that our products are original equipment parts. Prices subject to change without notice.