Replaces Toro Greensmaster 3250-D Parts

4 Bolt Cutting Unit - Models 04470 & 04471
Reel & Bedknife

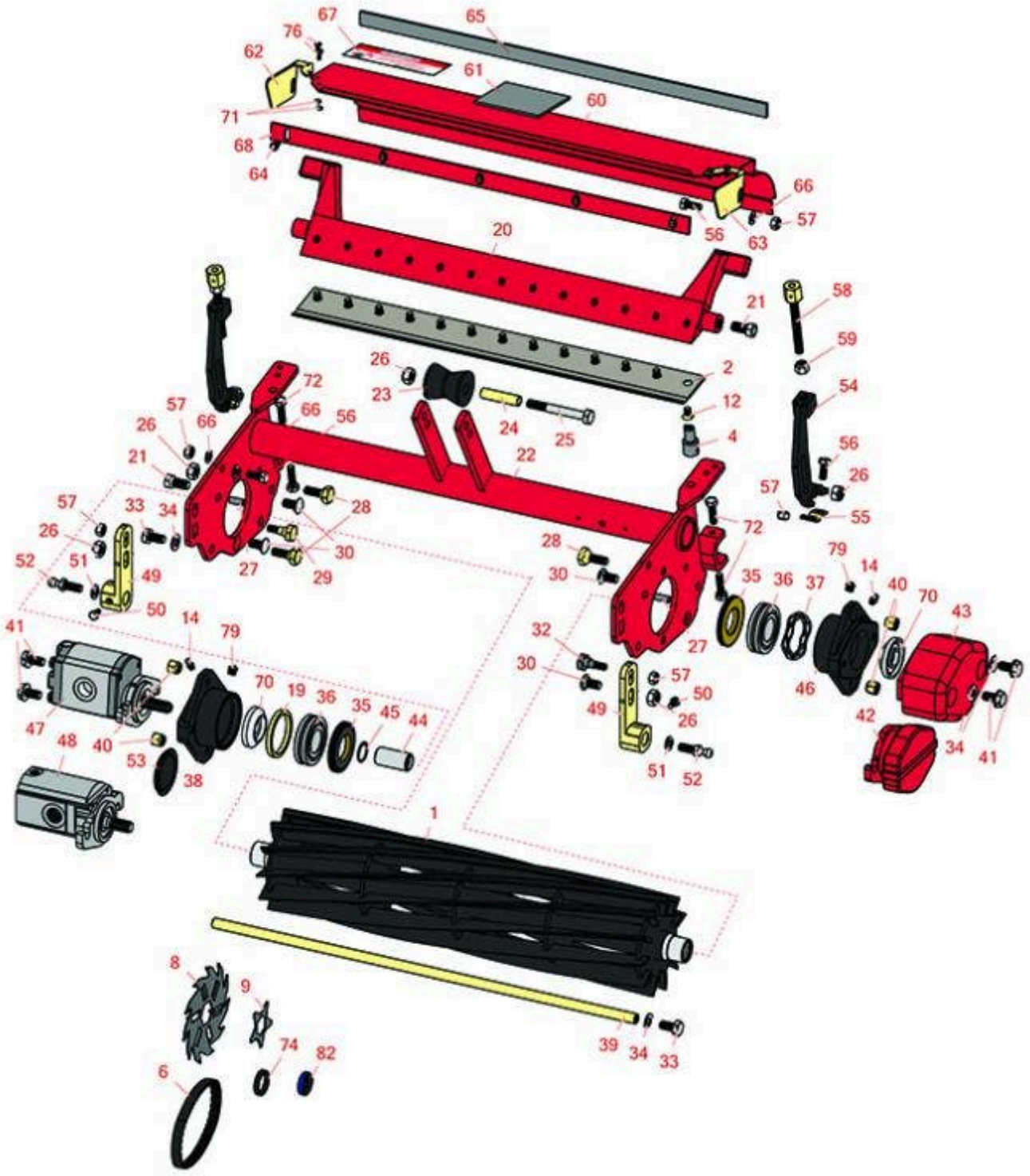

All original equipment manufacturers names and part numbers are used for identification purposes only, and we are in no way implying that our products are original equipment parts. Prices subject to change without notice.

Replaces Toro Greensmaster 3250-D Parts

4 Bolt Cutting Unit - Models 04470 & 04471
Reel & Bedknife

Item No	R&R Part No.	OEM Part No.	Description	Qty Req	Price Each	Order Quantity
R&R Reels, Lifetime Guaranteed						
1	**R94-8037**	94-4357, 94-8037	Reel - 11 Blade	1	**356.60**	
	Detail Description: R&R Reel blades are expertly crafted from premium high carbon-boron alloy steel, heat-treated to perfectly complement both R&R and OEM bedknives. Each reel undergoes precision cylindrical grinding on bearing surfaces, followed by relief grinding for optimal performance. Advanced computer balancing ensures extended reel and bearing life. Backed by our lifetime guarantee against defects in materials and craftsmanship under normal use, R&R Reels deliver unmatched durability and cutting precision you can trust.:					
1	**R94-4356**	94-4356, 94-8039	Reel - 8 Blade	1	**363.65**	
	Detail Description: R&R Reel blades are expertly crafted from premium high carbon-boron alloy steel, heat-treated to perfectly complement both R&R and OEM bedknives. Each reel undergoes precision cylindrical grinding on bearing surfaces, followed by relief grinding for optimal performance. Advanced computer balancing ensures extended reel and bearing life. Backed by our lifetime guarantee against defects in materials and craftsmanship under normal use, R&R Reels deliver unmatched durability and cutting precision you can trust.:					
R&R Bedknives, Lifetime Guaranteed						
2	**R93-4262**	65-8250, 93-4262, 93-4263	Bedknife - Micro Cut .062 - .187 HOC	1	**40.75**	
	Detail Description: R&R Bedknives are manufactured from high carbon-boron alloy steel and then hardened to RC46-49 to match the temper of our reel blades and original equipment reels. Bedknives are surface ground on the top and front edge and straightened three times before being packaged with oil for rust prevention. All R&R Bedknives now have an increased front edge grind for added life. All R&R Bedknives are guaranteed against defects in material and workmanship under normal use for the life of the part.:					
2	**R108-4303**	104-7720, 108-4303	Bedknife - Micro Cut Extended .062 - .187 HOC	3	**48.20**	
	Detail Description: R&R Bedknives are manufactured from high carbon-boron alloy steel and then hardened to RC46-49 to match the temper of our reel blades and original equipment reels. Bedknives are surface ground on the top and front edge and straightened three times before being packaged with oil for rust prevention. All R&R Bedknives now have an increased front edge grind for added life. All R&R Bedknives are guaranteed against defects in material and workmanship under normal use for the life of the part.:					

All original equipment manufacturers names and part numbers are used for identification purposes only, and we are in no way implying that our products are original equipment parts. Prices subject to change without notice.

Replaces Toro Greensmaster 3250-D Parts

4 Bolt Cutting Unit - Models 04470 & 04471
Reel & Bedknife

Item No	R&R Part No.	OEM Part No.	Description	Qty Req	Price Each	Order Quantity
2	**R99-4299**	99-4299	Bedknife - Tournament Extended	3	**44.10**	

Detail Description: R&R Bedknives are manufactured from high carbon-boron alloy steel and then hardened to RC46-49 to match the temper of our reel blades and original equipment reels. Bedknives are surface ground on the top and front edge and straightened three times before being packaged with oil for rust prevention. All R&R Bedknives now have an increased front edge grind for added life. All R&R Bedknives are guaranteed against defects in material and workmanship under normal use for the life of the part.:

2	**R93-4263**	63-8560, 66-9320, 93-4263, 93-6039	Bedknife - Tournament Cut .125 - .500 HOC	1	**44.35**	

Detail Description: R&R Bedknives are manufactured from high carbon-boron alloy steel and then hardened to RC46-49 to match the temper of our reel blades and original equipment reels. Bedknives are surface ground on the top and front edge and straightened three times before being packaged with oil for rust prevention. All R&R Bedknives now have an increased front edge grind for added life. All R&R Bedknives are guaranteed against defects in material and workmanship under normal use for the life of the part.:

2	**R93-4264**	57-4960, 63-8470, 93-4264	Bedknife - Low Cut .187 - 1.00 HOC	1	**42.55**	

Detail Description: R&R Bedknives are manufactured from high carbon-boron alloy steel and then hardened to RC46-49 to match the temper of our reel blades and original equipment reels. Bedknives are surface ground on the top and front edge and straightened three times before being packaged with oil for rust prevention. All R&R Bedknives now have an increased front edge grind for added life. All R&R Bedknives are guaranteed against defects in material and workmanship under normal use for the life of the part.:

2	**R94-6392**	62-2500, 94-6392	Bedknife - High Cut .312 - 1.00 HOC	1	**43.80**	

Detail Description: R&R Bedknives are manufactured from high carbon-boron alloy steel and then hardened to RC46-49 to match the temper of our reel blades and original equipment reels. Bedknives are surface ground on the top and front edge and straightened three times before being packaged with oil for rust prevention. All R&R Bedknives now have an increased front edge grind for added life. All R&R Bedknives are guaranteed against defects in material and workmanship under normal use for the life of the part.:

All original equipment manufacturers names and part numbers are used for identification purposes only, and we are in no way implying that our products are original equipment parts. Prices subject to change without notice.

Replaces Toro Greensmaster 3250-D Parts

4 Bolt Cutting Unit - Models 04470 & 04471
Reel & Bedknife

Item No	R&R Part No.	OEM Part No.	Description	Qty Req	Price Each	Order Quantity
2	**R150466**	63-8600, 64-6393, 94-6393	Bedknife - Super Thick .312 - 1.00 HOC	1	**44.25**	

Detail Description: R&R Bedknives are manufactured from high carbon-boron alloy steel and then hardened to RC46-49 to match the temper of our reel blades and original equipment reels. Bedknives are surface ground on the top and front edge and straightened three times before being packaged with oil for rust prevention. All R&R Bedknives now have an increased front edge grind for added life. All R&R Bedknives are guaranteed against defects in material and workmanship under normal use for the life of the part.:

2	**R108-4302**	108-4301, 108-4302	Bedknife - Tournament Cut Extended .125 - .500 HOC	0	**42.15**	

Detail Description: R&R Bedknives are manufactured from high carbon-boron alloy steel and then hardened to RC46-49 to match the temper of our reel blades and original equipment reels. Bedknives are surface ground on the top and front edge and straightened three times before being packaged with oil for rust prevention. All R&R Bedknives now have an increased front edge grind for added life. All R&R Bedknives are guaranteed against defects in material and workmanship under normal use for the life of the part.:

R&R Razor Tool Steel Bedknives, Lifetime Guaranteed

2	**R115-1881**	115-1881	Bedknife - Razor Tool Steel - 21 Tournament Cut .125 - .500 HOC	1	**93.25**	

Detail Description: R&R Razor bedknives are manufactured from premium alloy tool steel steel and then hardened to RC48-51 to match the temper of our Razor reel blades and original equipment premium series reels. Bedknives are surface ground on the top and front edge and specially packaged for rust prevention. All R&R Bedknives now have an increased front edge grind for added life. All R&R Bedknives are guaranteed against defects in material and workmanship under normal use for the life of the part. You can expect up to double the life over standard bedknives.:

2	**R115-1880**	115-1880	Bedknife - Razor Tool Steel - 21 Micro Cut .062 - .187 HOC	1	**93.75**	

All original equipment manufacturers names and part numbers are used for identification purposes only, and we are in no way implying that our products are original equipment parts. Prices subject to change without notice.

Replaces Toro Greensmaster 3250-D Parts

4 Bolt Cutting Unit - Models 04470 & 04471
Reel & Bedknife

Item No	R&R Part No.	OEM Part No.	Description	Qty Req	Price Each	Order Quantity
	Detail Description: R&R Razor bedknives are manufactured from premium alloy tool steel steel and then hardened to RC48-51 to match the temper of our Razor reel blades and original equipment premium series reels. Bedknives are surface ground on the top and front edge and specially packaged for rust prevention. All R&R Bedknives now have an increased front edge grind for added life. All R&R Bedknives are guaranteed against defects in material and workmanship under normal use for the life of the part. You can expect up to double the life over standard bedknives.:					
2	**R150492**	150492	Bedknife - Razor Tool Steel - 21 Micro Cut Ext	1	**86.25**	
	Detail Description: R&R Razor bedknives are manufactured from premium alloy tool steel steel and then hardened to RC48-51 to match the temper of our Razor reel blades and original equipment premium series reels. Bedknives are surface ground on the top and front edge and specially packaged for rust prevention. All R&R Bedknives now have an increased front edge grind for added life. All R&R Bedknives are guaranteed against defects in material and workmanship under normal use for the life of the part. You can expect up to double the life over standard bedknives.:					
Service Tools						
4	**R51-0880**	51-0880	Bedknife Screw Driver Tool - Fits Toro Bedknife Screws	0	**24.95**	
	Detail Description: Easily install and remove bed knife screws with the help of a ratchet with 3/8" drive. Tool manufactured with hardened alloy steel.:					
Belts						
6	**R95-0728**	95-0728	Belt - Groomer	1	**11.15**	
Verti-Cit Blades						
8	**R150209C**	106-6355	Verti-Cut Blade - Carbide Tipped 2mm	36	**13.25**	
	Detail Description: STRONG BY DESIGN. Each blade is made with the highest quality hand-picked steel, and laser-cut to our exacting specifications for superior toughness and wear. TUNGSTEN CARBIDE TIPS. Protect blades from abrasion for extended life and maintain a consistent cutting depth. Optional cutting widths to meet local turf conditions.:					
8	**R150109C**	106-5422	Verti-Cut Blade - Carbide Tipped 1.2mm	36	**13.05**	

All original equipment manufacturers names and part numbers are used for identification purposes only, and we are in no way implying that our products are original equipment parts. Prices subject to change without notice.

Replaces Toro Greensmaster 3250-D Parts

4 Bolt Cutting Unit - Models 04470 & 04471
Reel & Bedknife

Item No	R&R Part No.	OEM Part No.	Description	Qty Req	Price Each	Order Quantity
	Detail Description: STRONG BY DESIGN. Each blade is made with the highest quality hand-picked steel, and laser-cut to our exacting specifications for superior toughness and wear. TUNGSTEN CARBIDE TIPS. Protect blades from abrasion for extended life and maintain a consistent cutting depth. Optional cutting widths to meet local turf conditions.:					
9	**R95-5719**	95-5719	Blade - Groomer	41	**0.93**	
Other Parts Available						
12	**R150477**	57-4910	Screw - Bedknife 5/16-18 x 1/2	13	**0.38**	
14	**R302-5**	21-6010, 302-11, 302-37, 302-47, 302-5, 302-57, 302-58, 302-6, 31-0300, 32-9660, 60-0800, 62-3880, 92-4181	Fitting - Grease	4	**0.32**	
19	**R94-4544**	94-4544	Spacer - Reel	1	**6.25**	
20	**R93-2576-01**	93-2576, 93-2576-01	Bed Bar - 13 Hole	1	**151.60**	
21	**R315298**	217-74, 31-1070	Bolt - Bed Bar	2	**2.80**	
22	**R105-9768**	105-9768, 93-2490	Frame Assy	1	**262.30**	
22	**R95-1635-01**	95-1635, 95-1635-01	Frame - Reel Use w/4 Bolt Adj	1	**267.90**	
23	**R93-2463**	93-2463	Roller - Lift	1	**9.95**	
24	**R93-2464**	93-2464	Spacer - Roller	1	**3.05**	

All original equipment manufacturers names and part numbers are used for identification purposes only, and we are in no way implying that our products are original equipment parts. Prices subject to change without notice.

Replaces Toro Greensmaster 3250-D Parts

4 Bolt Cutting Unit - Models 04470 & 04471
Reel & Bedknife

Item No	R&R Part No.	OEM Part No.	Description	Qty Req	Price Each	Order Quantity
25	**R33115-080**	33115-080	Bolt - Hex HD M10 x 80	1	**1.35**	
26	**R33025-00**	33025-00	Locknut - 10mm x 1.5 Jam	4	**0.61**	
27	**R32121-123**	32121-123	Pin - Spring Roll 5/16 x 3/4	4	**0.49**	
28	**R95-0745**	95-0745	Bolt - Tapered	4	**10.20**	
29	**R105-3834**	105-3834, 95-1618	Bolt - Shoulder	1	**9.50**	
30	**R33125-025**	33125-025	Bolt - Carriage M10 x 25 w/Nut	4	**2.05**	
32	**R95-1617**	105-3833, 95-1617	Bolt - Eccentric Front Roller Bkt	1	**16.90**	
33	**R48-7770**	106-0276, 33115-020, 48-7770	Bolt - Hex HD M10 x 20	2	**1.05**	

All original equipment manufacturers names and part numbers are used for identification purposes only, and we are in no way implying that our products are original equipment parts. Prices subject to change without notice.

Replaces Toro Greensmaster 3250-D Parts

4 Bolt Cutting Unit - Models 04470 & 04471
Reel & Bedknife

Item No	R&R Part No.	OEM Part No.	Description	Qty Req	Price Each	Order Quantity
34	**R453011**	01-166-0100, 01-166-0120, 01-166-0270, 01-166-0500, 01-166-0600, 01-166-0620, 132-4593, 2356-3, 237-12, 24-10-AD, 24-11-AD, 24-11-BD, 24-12-AD, 24-12-BD, 30-9310, 32-8190, 3256-24, 3256-3, 3256-36, 3256-4, 453011, 47-9950, 48-9220, 513458, 7-0052	Washer - Flat 3/8 SAE Y/Zinc	6	**0.12**	
35	**R94-8908**	93-2483, 94-8908	Seal - Reel	2	**6.15**	
35	**R105-3824**	105-3824	Seal - Reel Double Lip	2	**6.85**	
36	**R105-3827**	105-3827	Bearing - Reel	2	**25.10**	
36	**R93-2489**	93-2489	Bearing - Reel	2	**23.65**	
37	**R94-4543**	94-4543	Spring - Flat Reel	2	**4.55**	
38	**R94-4545**	94-4545	Housing - Bearing	2	**35.65**	
38	**R105-3826**	105-3826	Housing - Bearing LH	1	**43.95**	
39	**R93-2477**	93-2477, 98-2196	Rod - Grass Shield	1	**17.70**	
40	**R93-2454**	93-2454	Nut - 3/8-16 Tapered	4	**2.70**	

All original equipment manufacturers names and part numbers are used for identification purposes only, and we are in no way implying that our products are original equipment parts. Prices subject to change without notice.

Replaces Toro Greensmaster 3250-D Parts

4 Bolt Cutting Unit - Models 04470 & 04471
Reel & Bedknife

Item No	R&R Part No.	OEM Part No.	Description	Qty Req	Price Each	Order Quantity
41	**R93-2569**	93-2569	Bolt - Hex Washer Nyloc M10	4	**2.05**	
42	**R95-1642-01**	93-2570, 95-1642, 95-1642-01	Counterweight	1	**31.80**	
43	**R100-7113-01**	100-7113-01	Counterweight	1	**46.70**	
44	**R94-4507**	94-4507	Coupling - Reel	1	**11.15**	
45	**R32120-37**	32120-37	Ring - Internal Retaining Reel	1	**2.05**	
46	**R105-3825**	105-3825	Housing - Bearing RH	1	**43.95**	
47	**R105-9770**	10-5090, 105-9770, 26-5690, 70-9800, 94-3506, 94-3507	Hydraulic Motor - Reel Quick Release	1	**484.95**	
	Tech Note: Fits Models 3000, 3050 & 3100:					
48	**R120-2072**	100-6426, 108-6487, 112-9200, 120-2072, 93-1375	Hydraulic Gear Motor	1	**382.95**	
49	**R94-8170**	94-8170	Bracket - Roller Front	2	**20.50**	
50	**R48-7610**	33113-012, 48-7610	Bolt - Hex HD Nyloc M6 x 12	2	**0.66**	
51	**R3254-6**	01-166-0010, 01-166-0280, 01-166-0610, 3253-5, 3254-18, 3254-6, 3290-223, 48-9370	Washer - Lock 3/8	2	**0.08**	

All original equipment manufacturers names and part numbers are used for identification purposes only, and we are in no way implying that our products are original equipment parts. Prices subject to change without notice.

Replaces Toro Greensmaster 3250-D Parts

4 Bolt Cutting Unit - Models 04470 & 04471
Reel & Bedknife

Item No	R&R Part No.	OEM Part No.	Description	Qty Req	Price Each	Order Quantity
52	**R94-2958**	94-2958	Stud - Alloy Ball Joint	2	**3.90**	
53	**R150485**	2410-30	Cap - Protective Bearing Housing	1	**0.78**	
54	**R95-1638**	95-1638	Bracket Only - HOC Adj	2	**34.30**	
54	**R99-6858**	99-6858	Bracket Assy - Rear Roller	2	**37.50**	
55	**R99-8168**	95-1637, 99-8168	Collar - Bracket HOC	2	**3.75**	
56	**R66-3160**	33114-020, 43-0110, 48-7710, 66-3160	Bolt - Flanged Hex HD	2	**0.49**	
57	**R33024-00**	33024-00	Locknut - 8mm x 1.25	4	**2.10**	
58	**R95-1633**	95-1633	Adjustment - HOC	2	**21.10**	
59	**R3296-5**	3296-5	Locknut - 3/8-24 Jam Nylon	2	**0.82**	
60	**R99-4197**	99-4197	Shield - Rear Assy	1	**81.95**	
61	**R99-1456**	99-1456	Pad - Wear Grass Shield	1	**10.80**	
62	**R99-4151**	99-4151	Deflector - RH Grass Shield	1	**14.15**	
63	**R99-4152**	99-4152	Deflector - Grass Shield LH	1	**13.10**	
64	**R32144-73**	104-2065, 32144-73	Screw - Machine Hex Washer Head	5	**0.41**	
65	**R95-1636**	95-1636	Seal - Strip Grass Shield	1	**4.10**	
66	**R3256-74**	3256-74	Washer - Flat	4	**0.72**	
67	**R354083**	104-7729	Decal - Danger	1	**1.45**	
68	**R36-7260**	36-7260	Bar - Cut Off Grass Shield	1	**11.60**	

All original equipment manufacturers names and part numbers are used for identification purposes only, and we are in no way implying that our products are original equipment parts. Prices subject to change without notice.

Replaces Toro Greensmaster 3250-D Parts

4 Bolt Cutting Unit - Models 04470 & 04471
Reel & Bedknife

Item No	R&R Part No.	OEM Part No.	Description	Qty Req	Price Each	Order Quantity
70	**R104-2067**	104-2067	Spacer - End - Motor	2	**4.10**	
71	**R46-0430**	46-0430	Locknut - 4mm	4	**0.56**	
72	**R33114-030**	33114-030, 42-9520, 48-7730	Bolt - Hex HD M8-1.25 x 30	4	**1.25**	
74	**R70-1350**	70-1350	Spacer - 1/4 Fits Groomer Shaft	84	**0.93**	
76	**R60-6500**	65-6500	Bolt - Hex HD M4 x 10	4	**0.56**	
79	**R170714**	170714, 302-34, 302-39, 62-3520	Fitting - Pressure Relief	2	**2.45**	
82	**R353-585**	353-585, 353-587, 354-34, 72-4380, 75-1210, 75-1270, 92-8863, 92-8864	Seal - High Pressure - Reel Motor	1	**21.50**	

All original equipment manufacturers names and part numbers are used for identification purposes only, and we are in no way implying that our products are original equipment parts. Prices subject to change without notice.