Replaces Toro Greensmaster 3250-D Parts

DPA Cutting Unit - Models 04610, 04611 & 04616
DPA Reel Mower Rear Roller Brush - Model 04641

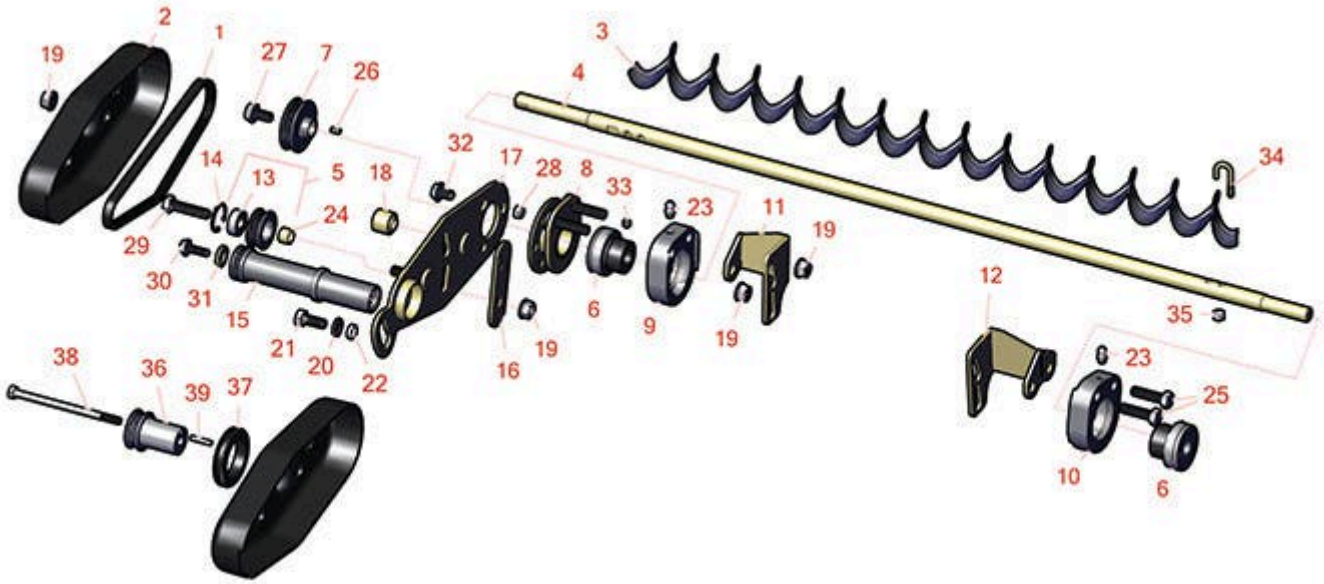

All original equipment manufacturers names and part numbers are used for identification purposes only, and we are in no way implying that our products are original equipment parts. Prices subject to change without notice.

Replaces Toro Greensmaster 3250-D Parts

DPA Cutting Unit - Models 04610, 04611 & 04616
DPA Reel Mower Rear Roller Brush - Model 04641

Item No	R&R Part No.	OEM Part No.	Description	Qty Req	Price Each	Order Quantity
Belt						
1	**R105-5720**	105-5720	Belt - Poly V	1	**9.25**	
Other Parts Available						
2	**R105-5719**	105-5719	Cover - Rear Brush	1	**55.70**	
3	**R105-6792**	104-1829, 105-6792	Brush - Rear Roller	1	**55.95**	
4	**R105-5736**	105-5736	Shaft-Brush	1	**116.15**	
5	**R104-1834**	104-1820, 104-1834	Idler Bearing - Assy	1	**23.20**	
6	**R104-1842**	104-1842, 98-5208	Bearing - Roller	2	**31.55**	
7	**R106-6917**	106-6917	Pulley - Driven	1	**38.45**	
8	**R105-5725**	105-5725	Adapter Assy	1	**37.55**	
9	**R105-5729**	105-5729	Housing - Bearing RH	1	**50.90**	
10	**R105-5730**	105-5730	Housing - Bearing LH	1	**50.90**	
11	**R112-9245**	112-9245	Bracket - Brush RH	1	**25.60**	
12	**R112-9243**	112-9243	Bracket - Brush LH	1	**25.60**	
13	**R251-259**	251-259, 251-307	Bearing - Ball	1	**12.65**	
14	**R104-4727**	104-4727	Ring - Retaining	1	**0.91**	
15	**R105-5722**	105-5722	Pulley - Driver	1	**75.65**	
16	**R105-5724**	105-5724	Plate - Plug	1	**3.05**	
17	**R105-5741**	105-5741	Plate Assy	1	**24.95**	

All original equipment manufacturers names and part numbers are used for identification purposes only, and we are in no way implying that our products are original equipment parts. Prices subject to change without notice.

Replaces Toro Greensmaster 3250-D Parts

DPA Cutting Unit - Models 04610, 04611 & 04616
DPA Reel Mower Rear Roller Brush - Model 04641

Item No	R&R Part No.	OEM Part No.	Description	Qty Req	Price Each	Order Quantity
18	**R105-5742**	105-5742	Spacer - Shoulder	2	**9.25**	
19	**R14M7298**	104-2612, 33004-00	Nut - 8mm x 1.25 Flanged	11	**0.41**	
20	**R66-3160**	33114-020, 43-0110, 48-7710, 66-3160	Bolt - Flanged Hex HD	1	**0.49**	
21	**R453009**	01-166-0400, 24-10-BD, 24-9-AD, 32-9650, 3256-2, 3256-23, 3256-3, 3256-67, 3290-217, 3556-3, 4-2390, 7-0152	Washer - Flat 5/16 SAE	1	**0.14**	
22	**R82-4240**	82-4240	Spacer - Bearing	1	**3.75**	
23	**R302-5**	21-6010, 302-11, 302-37, 302-47, 302-5, 302-57, 302-58, 302-6, 31-0300, 32-9660, 60-0800, 62-3880, 92-4181	Fitting - Grease	2	**0.32**	
24	**R105-5723**	105-5723	Spacer - Tube	1	**5.10**	
25	**R33114-030**	33114-030, 42-9520, 48-7730	Bolt - Hex HD M8-1.25 x 30	2	**1.25**	

All original equipment manufacturers names and part numbers are used for identification purposes only, and we are in no way implying that our products are original equipment parts. Prices subject to change without notice.

Replaces Toro Greensmaster 3250-D Parts

DPA Cutting Unit - Models 04610, 04611 & 04616
DPA Reel Mower Rear Roller Brush - Model 04641

Item No	R&R Part No.	OEM Part No.	Description	Qty Req	Price Each	Order Quantity
26	**R95-9619**	95-9619	Key - Square 1/8 x 1/8 x 5/16	1	**1.05**	
27	**R33104-016**	33104-016	Bolt - Hx HD Fl	1	**2.70**	
28	**R33023-00**	33023-00, 48-7900, 49-7810	Locknut - ESNA 6mm x 1.0	3	**0.32**	
29	**R33114-035**	33114-035	Bolt	1	**4.25**	
30	**R33103-020**	33103-020	Bolt - Hex Washer M6-1.0 x 20	1	**2.50**	
31	**R105-5769**	105-5769	Washer	1	**0.98**	
32	**R33103-012**	33103-012	Bolt - Flanged Hx HD	3	**3.70**	
33	**R3245-1**	244-19, 32104-67, 3245-1	Screw - Set 1/4-20 x 1/4	2	**1.30**	
34	**R104-1830**	104-1830	Bolt - J	2	**5.10**	
35	**R3296-2**	32127-10, 3296-2, 9157404	Nut - #10 Lock	2	**1.10**	
36	**R106-6915**	106-6915	Pulley Assy	1	**50.85**	
37	**R240-7**	240-7	Grommet - Rubber - 2 in OD	1	**10.45**	
38	**R106-6916**	106-6916	Bolt	1	**4.05**	
39	**R32121-23**	32121-23	Pin - Roll 5/32 x 3/4	1	**1.30**	

All original equipment manufacturers names and part numbers are used for identification purposes only, and we are in no way implying that our products are original equipment parts. Prices subject to change without notice.