SAVE YOUR BATTERY CRATE

FOR WARRANTY PURPOSES

LiFePO4 Battery Operation Manual

Model: BE10572P

Bolt Energy USA LLC

Address:6650 TREELAND AVE, LARGO, FL 33773

6650 Treeland Ave N Largo FL 33773 · 727-955-4955.
INFO@BOLTENERGYUSA.COM

ALERT
ABC
*Always *Be *Charging

Congratulations on your New High Performance BOLT ENERGY USA Battery Quick Start Guide

1. Remember to always keep your vehicle plugged into the smart charger when not in use. The Bolt Energy USA approved smart charger will automatically control the charging process to ensure the battery remains in good condition. It's perfectly safe to A.B.C. Your battery is designed to handle this type of charging.

2. Chronic undercharging results in the State of Charge (SOC) meter reading inaccurately and you could run out of power sooner than expected and cause battery cell damage. Always charge to 100% before use for best use.

3. If you will not use your vehicle for a week or longer, it is advisable to keep the battery at 50-80% SOC, disconnect the charger, and switch off the battery using the on/off button. When you're ready to use the vehicle again, switch on the battery, reconnect the charger, and allow it to complete a full charging cycle without interruption. This will recalibrate the SOC meter with the battery for a full charge.

4. Opportunity charging (needed partial charges below 100%) or interrupting a charge is ok with lithium products as long as the battery is charged to 100%, a full charge cycle, at least once per day.

5. Only use our products for their intended purpose as recommended by the vehicle manufacturer. If you plan on making modifications to the original design or specs, contact the manufacturer to guarantee safety.

6. Do not use an extension cord over 15ft long with a rating below 12AWG. Longer cords with lighter gauge wire will cause heat resistance and could pose an electrical fire risk.

****Failure to follow these instructions will VOID the warranty and will create operational issues with your battery and vehicle.****

Customer Acknowledgement

Sign:_____ Date:_____

Please refer to your owners manual for additional Battery operations, safety precautions, Bluetooth, installation/wiring diagrams, etc.

ALERT
ABC
*Always *Be *Charging

ALERT
ABC
*Always *Be *Charging

ALERT
ABC
*Always *Be *Charging

6650 Treeland Ave N Largo FL 33773 · 727-955-4955.
INFO@BOLTENERGYUSA.COM

Congratulations on your new
BOLT ENERGY USA LITHIUM BATTERY purchase.
The BEST LITHIUM BATTERY on the market today!
"WE ARE POWER"

Model: BE10572P

Battery appearance structure and size

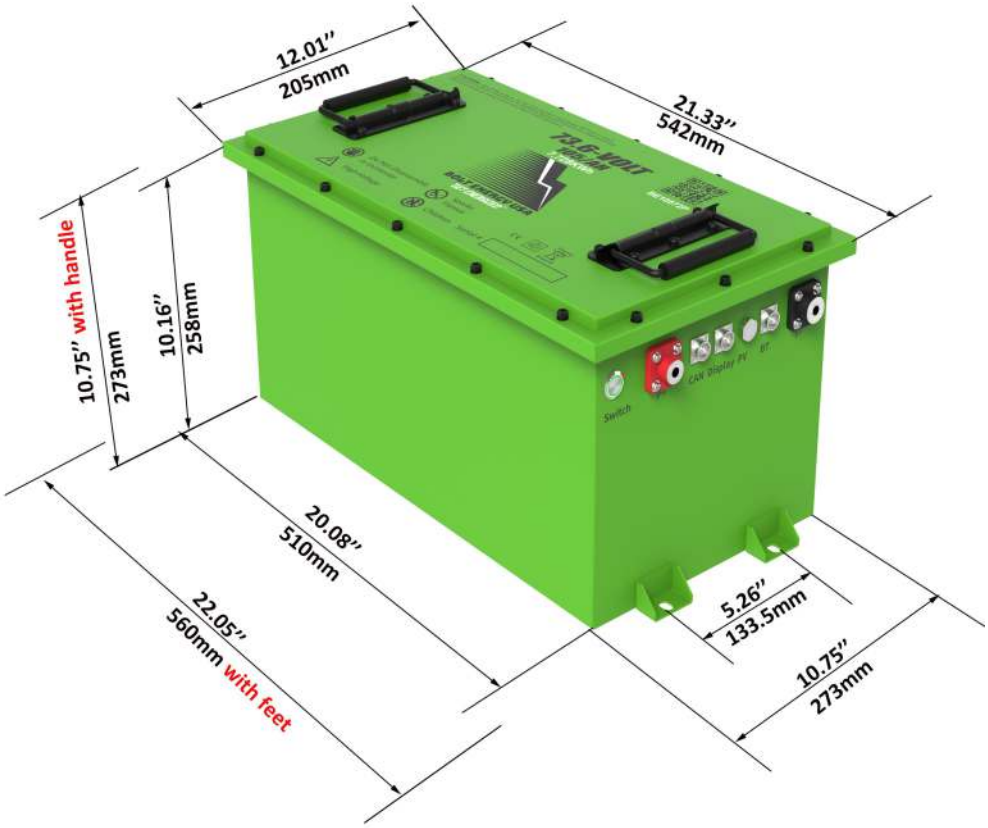

6650 Treeland Ave N Largo FL 33773 · 727-955-4955.
INFO@BOLTENERGYUSA.COM

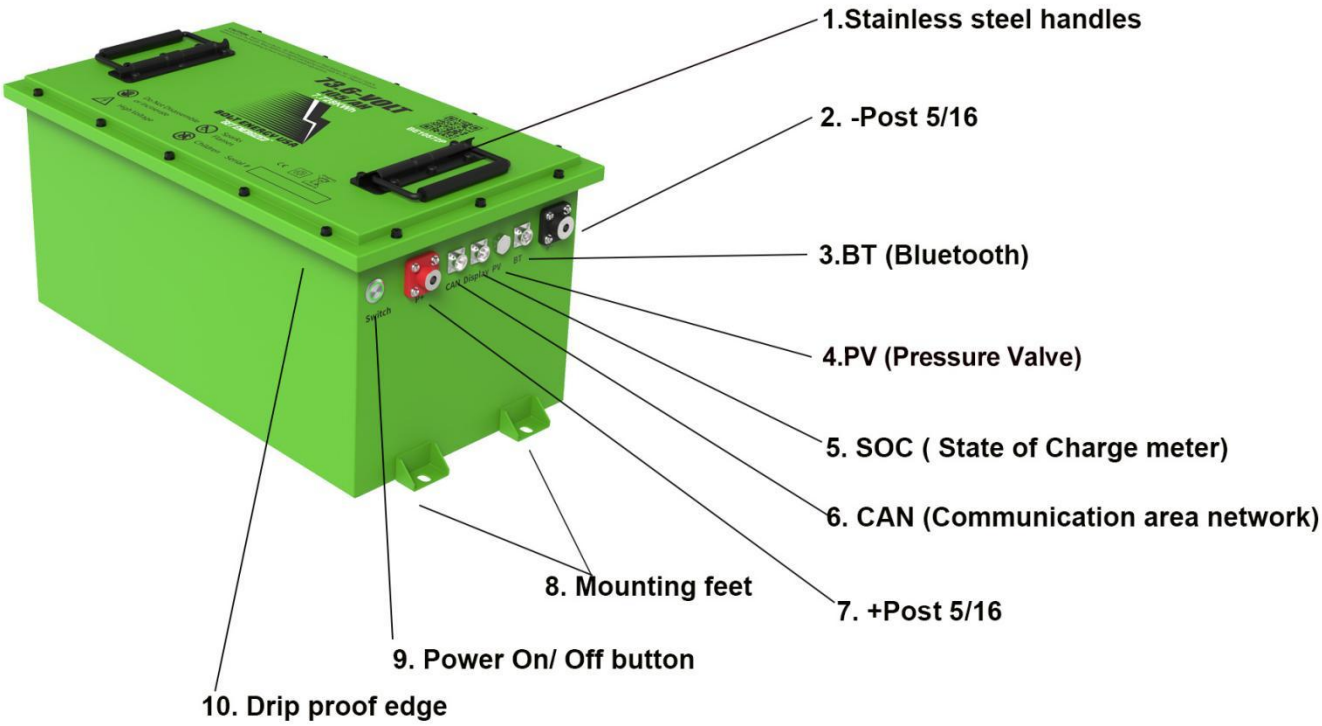

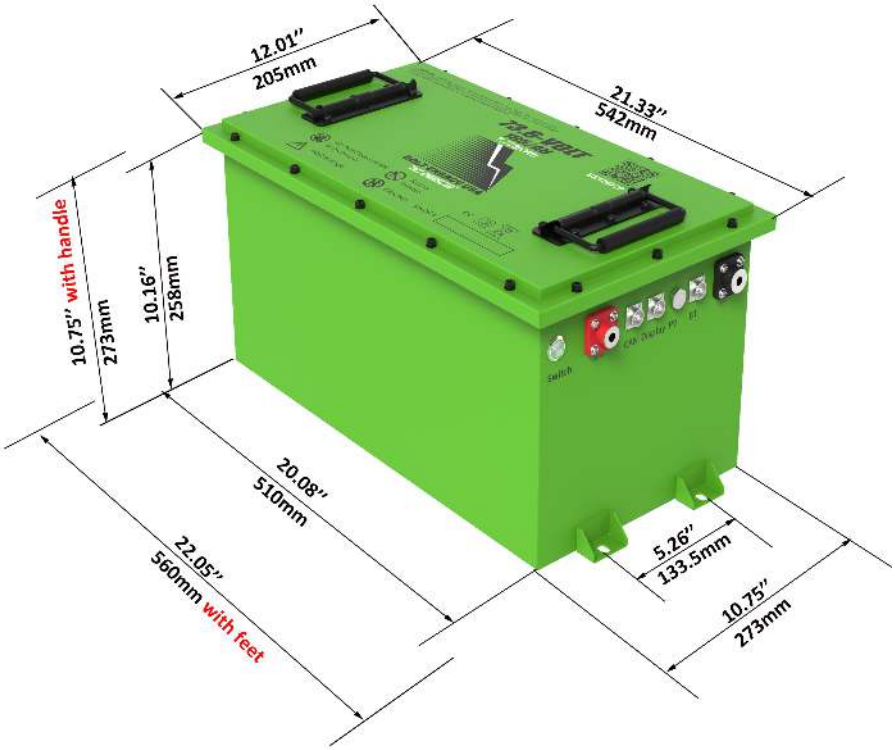

6650 Treeland Ave N Largo FL 33773 · 727-955-4955.
INFO@BOLTENERGYUSA.COM

1. Complete professional kit.

72V 105AH Complete professional kit(BE10572P) **Note: Standard kit will only have some of these products.**			
73.6V-105AH Battery	SOC (state of charge meter)	72V BOLT 50AMP high output reducer	*Bluetooth receiver *2-5/16 battery post with lock washers *User manual * 3- 3/8 ,3-5/16 battery ring terminal *3-ABC stickers *1-Bolt oval sticker *1-Bolt Lightning sticker *10-10" tie straps
Bracket with Nuts and bolts	2-40" 2AWG cables	Lead battery removal strap	72V- 400A solenoid with diode
Waterproof charger W/charger interlock pigtail	12 AWG 15 foot extension cord	Deco Plate for AC Hardwire	AC Hardwire onboard charge adaptor

6650 Treeland Ave N Largo FL 33773 · 727-955-4955.
INFO@BOLTENERGYUSA.COM

2. Normal performance:

NO.	Item	General Parameter	
1	Rated capacity	105Ah	
2	Standard voltage	73.6V（23S）	
3	Standard Charge voltage	73.6 V	
4	Charging method	CC-CV	
5	Charge current	Normal	100A
		Max	375A
6	Cut-off voltage	57.5V	
7	Continuous discharge current	250A	
8	Peak discharge current	500A(30 Secs)	
9	Total weight	137.26 LBS	
10	Impedance at 1000Hz.	≤50mΩ	
11	Charge method	Charge	30 - 140°F
		Discharge	-4 - 140°F
12	Storage environment	Temperature	50 - 113°F
		Humidity	≤ 75%RH
13	Cycle life	1C@DOD100%	≥2500 cycles
		0.2C@DOD100%	≥4000 cycles
14	Self-discharge rate	≤3%/Month	
15	Battery dimension	L=20.08 IN	
		W= 10.75 IN	
		H= 10.75 IN	
16	Bluetooth function	Android telephone (system version must be higher than 4.3) or iPhone (system version must be higher than iPhone4S & iOS7), In the APP store install "Bolt USA" You will be able to read the voltage, SOC, etc. after connected properly.	

6650 Treeland Ave N Largo FL 33773 · 727-955-4955.
INFO@BOLTENERGYUSA.COM

3. Performance & Test Condition.

No.	Project	Standard		Testing method
1	Rated capacity	105Ah		After a standard charge, discharge @0.5C current to the end of discharge voltage. Cycles for three times, one cycle capacity arrive standard, that's to say it is qualified. (The below as the same)
2	Charging storage ability in normal temperature	Rest Capacity ≥ Standard Capacity *97%		After standard charging, store at 77°F ± 41°F for 1 month, and then discharge capacity @0.2C current to the end of discharge voltage, then measure the capacity of cell.
3	Cycle life	Capacity≥ Standard Capacity *80%		After standard charge, discharge @0.2C current to the end of the discharge voltage. Rest for 1h, cycles for 4000 times.
4	Internal Impedance	≤50mΩ		At 50% SOC, 1kHz AC internal resistance test instrument.
5	Discharge temperature characteristic At 0.2C	-4°F (6h)	≥70%	Discharge Capacity at specified temperature/Capacity at 77°F
		32°F (6h)	≥90%	
		77°F (4h)	≥100%	
		131°F (4h)	≥97%	

6650 Treeland Ave N Largo FL 33773 · 727-955-4955.
INFO@BOLTENERGYUSA.COM

4. BMS technical parameters.

Bolt Energy USA battery is designed with an intelligent protection board solution, which can monitor the battery running status in real time. The protection board has a strong loading capacity, and the maximum discharge current can reach 500A(30 secs). It provides protection against overcharge, over discharge, over current, over temperature, and many others. The battery power input and output are actively cut off for protection. Features are as follows:

- 23-cell battery series protection.
- Various protection functions for charging and discharging.
- Hardware discharge over current, short circuit protection function processing.
- Software over voltage, under voltage, temperature, overload protection function processing.
- Accurate SOC (state of charge) calculation with automatic learning SOC (state of charge) function.
- Hardware discharge over current, short circuit protection function processing.
- With UART (universal asynchronous receiver-transmitter) communication, support for Bluetooth.

5.Bluetooth APP interface.

App supports Apple and Android systems, supports English and dual language switching. When Bluetooth signal is strong, it can be connected within 32 feet. In the APP store install " **Bolt USA**". You will be able to read the voltage, SOC, battery history record, update firmware, send data to email or cloud server for fast after sales service.

1.In the APP store install " Bolt USA".

2. Select the bluetooth number and click to enter the APP.

3. Plug the bluetooth to the "BT" port in battery and screw down to make it tight and good connection.

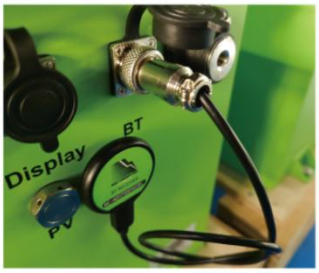

6650 Treeland Ave N Largo FL 33773 · 727-955-4955.
INFO@BOLTENERGYUSA.COM

4. Enter into the APP interface

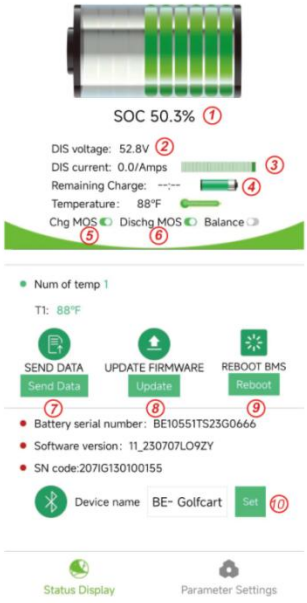

interface after ⑦ Send Data

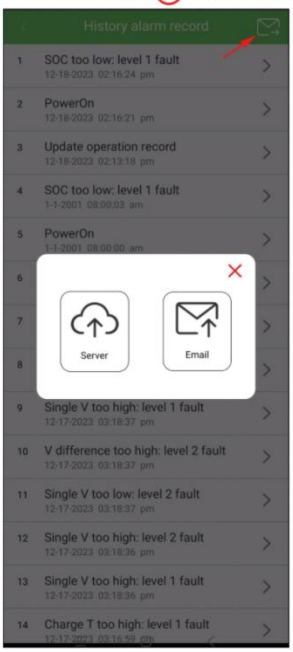

interface after ⑧ Update Firmware

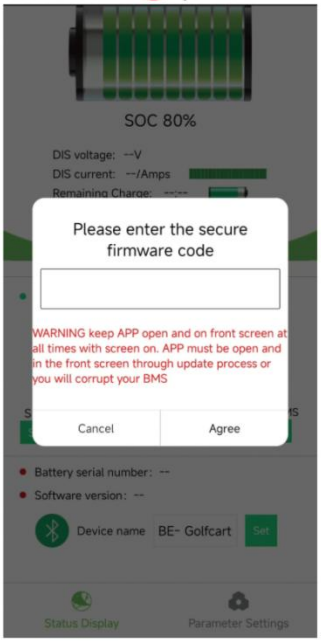

① *SOC Remaining battery %*
② *Discharge voltage*
③ *Discharge current*
④ *Remaining Charge*
⑤ *Charge MOS connect or disconnect*
⑥ *Discharge MOS connect or disconnect*
⑦ *Send Data: Click "Send Data" to enter the history record and scroll up to down -load history record.*
Press email icon at top right corner and you can choose to send history record to cloud service or by email.

If you find the previous history record time is not correct, it will be adjusted to the time in your mobile phone for new record once you connect to the bluetooth receiver.

⑧ *UPDATE FIRMWARE: Fill in the firm-ware code and update to the new Software version.*
⑨ *REBOOT BMS: It will exit the APP for reboot when click this function.*
⑩ *Fill in the new name and click "Set" to make your own Device name*

6. Storage and Transportation.

- Proper environment for transportation protocols of the LiFePO4 battery pack need to be followed to protect the Battery and ensure it performs to manufacturer's specs.

- During transportation the Battery should be at 50% SOC to prevent short circuits if there is an accident reducing the risk of fire.

- Battery should be kept at 32°F - 113°F indoors where it's dry, clean, and well- ventilated.
- During the loading and transport of Battery, avoid dropping, turning over or stacking.

7. Warnings and Tips.

- In order to prevent the Battery from leaking, overheating and potential explosion, it is vitally important to follow these instructions carefully! Failure to follow these warnings could result in fire, serious personal injury or death.

- Never throw the Battery into water or otherwise expose to water, keep it under dry, shady, and cool conditions.
- Never reverse the positive and negative post connection.
- Never connect the positive and negative posts of the Battery with unapproved wiring.
- Never ship or store the Battery together with metal that could contact the posts.
- Never knock, throw, or trample the Battery.
- Never drill, cut, puncture or bolt through the Battery case.

6650 Treeland Ave N Largo FL 33773 · 727-955-4955.
INFO@BOLTENERGYUSA.COM

Caution: Risk of Fire or Burns. Do Not Disassemble or Heat Above 70C(158 F),crunch, puncture or incinerate.Keep Battery in original packaging until ready to use. Dispose of used batteries properly according to local recycling or waste regulations.

When working with the Battery,do not put wrenches or other metal objects across the Battery terminals. An arc can occur causing an explosion or fire at the Battery.

Always remove the negative (-) cable to a motor controller first, and install it last. A spark can occur causing an explosion or fire at the battery.

Do not allow charging Battery to be immersed in water or liquids. Failure to follow this warning could result in fire, serious personal injury or death.

Do not attempt to open the Battery. Failure to follow this warning could result in fire, serious personal injury or death.

Install charging equipment in compliance with local regulations. Failure to follow this instruction could result in personal injury, death or property damage.

Make sure any electrical outlet used for charging your Battery is properly grounded. Check with a qualified electrician if you are uncertain whether or not the electrical outlet is properly grounded. Do not modify the plug provided with the product if it does not fit in the outlet. Have a proper outlet installed by a qualified electrician.

It is recommended that electrical outlets for use with your charger be installed by a licensed, qualified electrician. To avoid serious injury or death, installation must comply with the provisions of the National Electric Code (NEC) and all local codes. In cases of conflict between local codes and the NEC, local codes shall take precedence.

Never use the charger with an extension cord longer than 15ft or rated below 12 AWG.

Shock hazard - make sure the plug is fully inserted into the wall outlet so that there are no exposed blade surfaces.

Children should be supervised when in the vicinity of the charger while plugged in.

Do not put fingers into the electric charge coupler or any electrical outlet.

Do not expose the charge cord to flammable vapors.

Be sure to have proper ventilation when charging batteries.

Never use or keep the Battery under high temperatures. Otherwise, it will cause battery to heat, catch on fire, or lose some function and reduce the life. The necessary temperature for long-term storage is 32-113°F.

Never throw the Battery into fire or a heating machine. This type of action could lead to fire, explosion, and environmental pollution; scrap Batteries should be returned to the supplier or handled by a qualified recycling station.

Never use the Battery near strong static and strong magnetic fields, otherwise it will damage the BMS (Battery management system).

If the Battery leaks and the electrolyte gets into your eyes, avoid touching your eyes, instead please wash eyes with water and seek emergency medical attention ASAP. Otherwise, it can cause eye damage.

If the Battery emits an odor, excessive heat, or anything abnormal during use, storage, or charging, please disconnect the charger, turn the Battery switch to the off position and call Bolt Energy USA for immediate support, do not use the Battery.

ONLY use the charger provided by Bolt Energy USA when charging.

Check the voltage of Battery and relevant connectors before using. It cannot be used until everything is connected properly.

Prior to charging, fully check to make sure the wires and surrounding insulation are intact. Make sure the charging cord is securely plugged in the AC wall outlet. Do not attempt to charge if SOC meter is below 57.5V as this is abnormal, disconnected the charger, turn off the Battery, and contact Bolt Energy USA for immediate support.

The Battery should be stored at 50%-70% SOC and must be charged once every 6 months to avoid severe discharge or damage not covered by warranty.

Clean dirty or corroded terminal posts with a clean dry cloth to prevent resistance, heat build up, and potential damage to the Battery.

Never run Batteries in series. If you do, your warranty will be VOID.

Two of our Batteries in parallel will work and we recommend you seek proper installation guidance from Bolt Energy USA.

We do not recommend using our Products for anything not recommended by the original manufacturer of your Vehicle (Golf Cart, RV, Boat, Etc). If you have intentions of making any modifications to the original Vehicle design or specification, we highly recommend you first verify with the OEM of the Vehicle it is safe to do so.

Failure to follow these recommendations will VOID your Battery warranty.

6650 Treeland Ave N Largo FL 33773 · 727-955-4955.
INFO@BOLTENERGYUSA.COM

Basic Universal Installation Instructions

- 51V-105AH-BE10551M
- 51V-105AH-BE10551T
- 38V-105AH-BE10538C
- 51V-160AH-BE16051B
- 72V-105AH-BE10572P
- 51V- 60AH-BE6051F

Caution:

*** We recommend you contact a licensed professional for any electrical installations or modifications.**

*** If you choose to install your new BOLT ENERGY USA lithium Battery, we highly recommend two-person installation and back braces.**

*** Safety glasses and chemical resistant gloves are a necessary safety precaution for any Battery installation.**

6650 Treeland Ave N Largo FL 33773 · 727-955-4955.
INFO@BOLTENERGYUSA.COM

1. Remove old batteries

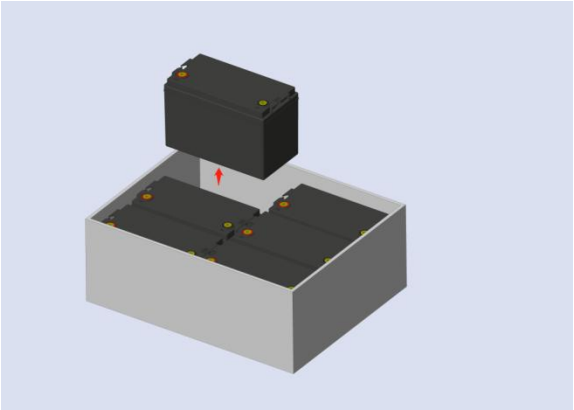

2. Install supplied brackets. Mount the brackets in battery box or tray using the supplied stainless hardware. Drilling required.
Caution: do not drill into battery!

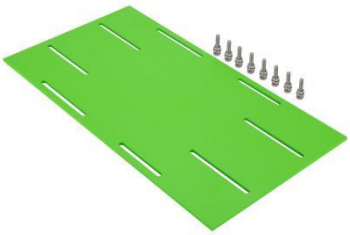

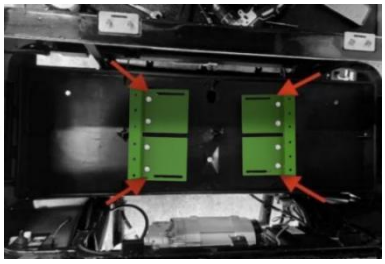

3. Install your BOLT ENERGY USA battery on the brackets using the supplied 5/16th bolts. Install all 4 bolts by hand before tightening any bolts. Once bolts are in you can now tighten them down. After snug ¼ turn to tighten.

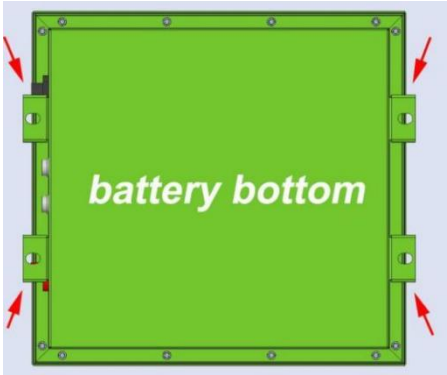

6650 Treeland Ave N Largo FL 33773 · 727-955-4955.
INFO@BOLTENERGYUSA.COM

4. Install your positive and negative battery and charger cables (red to positive, black to negative) Using a torque wrench, tighten to 132 inch lbs. (11ft lbs).DO NOT OVER TIGHTEN!

5. See SOC (state of charge meter) installation instructions included in this manual below.

6. IMPORTANT charge battery to 100% before first use.
7. See wiring diagram below in this manual for wiring solenoid, voltage reducer, etc

6650 Treeland Ave N Largo FL 33773 · 727-955-4955.
INFO@BOLTENERGYUSA.COM

36V/48V Quick reference wiring schematic

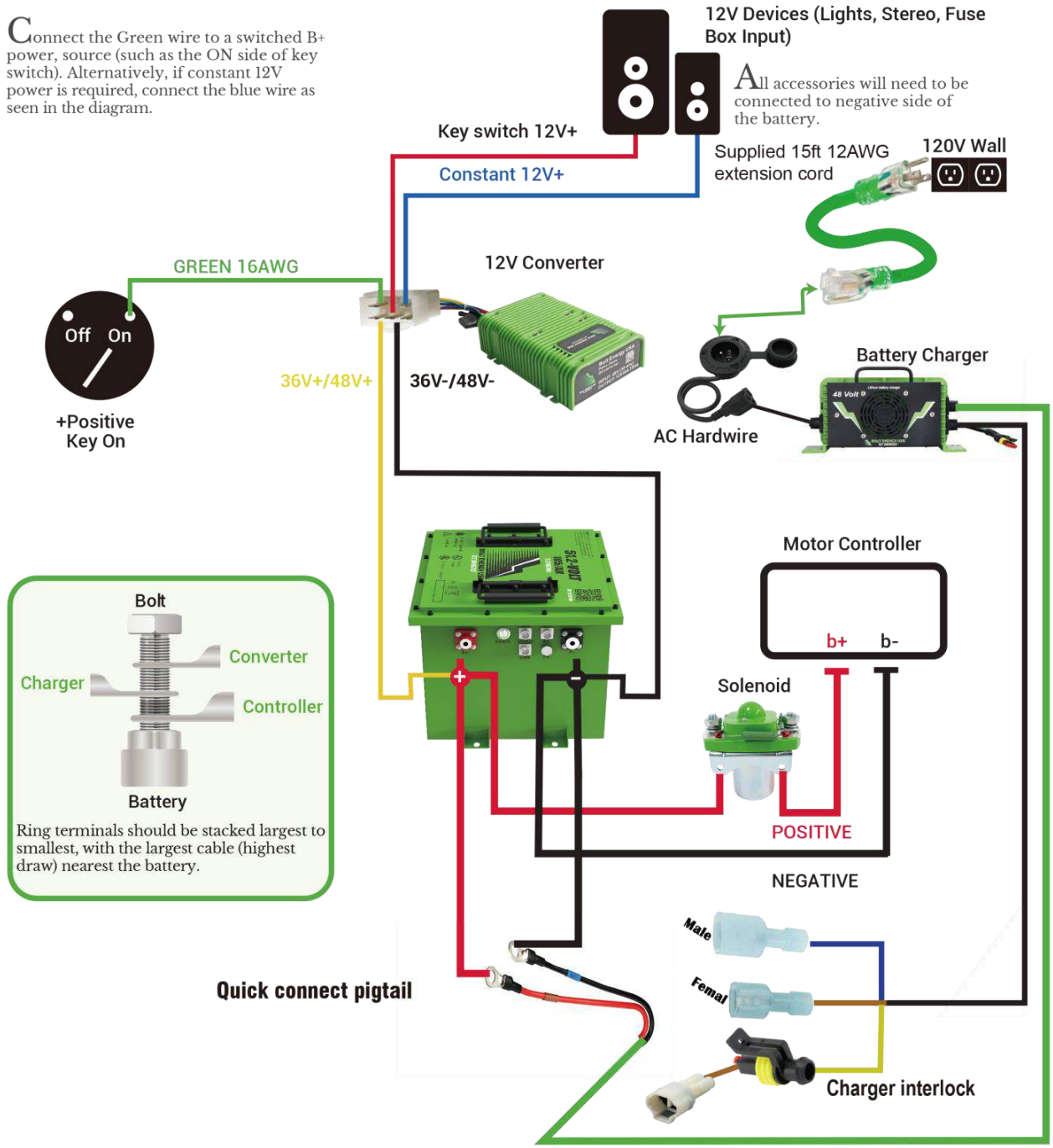

www.boltenergyusa.com

Congratulations, you have now been " Energized"

6650 Treeland Ave N Largo FL 33773 · 727-955-4955.
INFO@BOLTENERGYUSA.COM

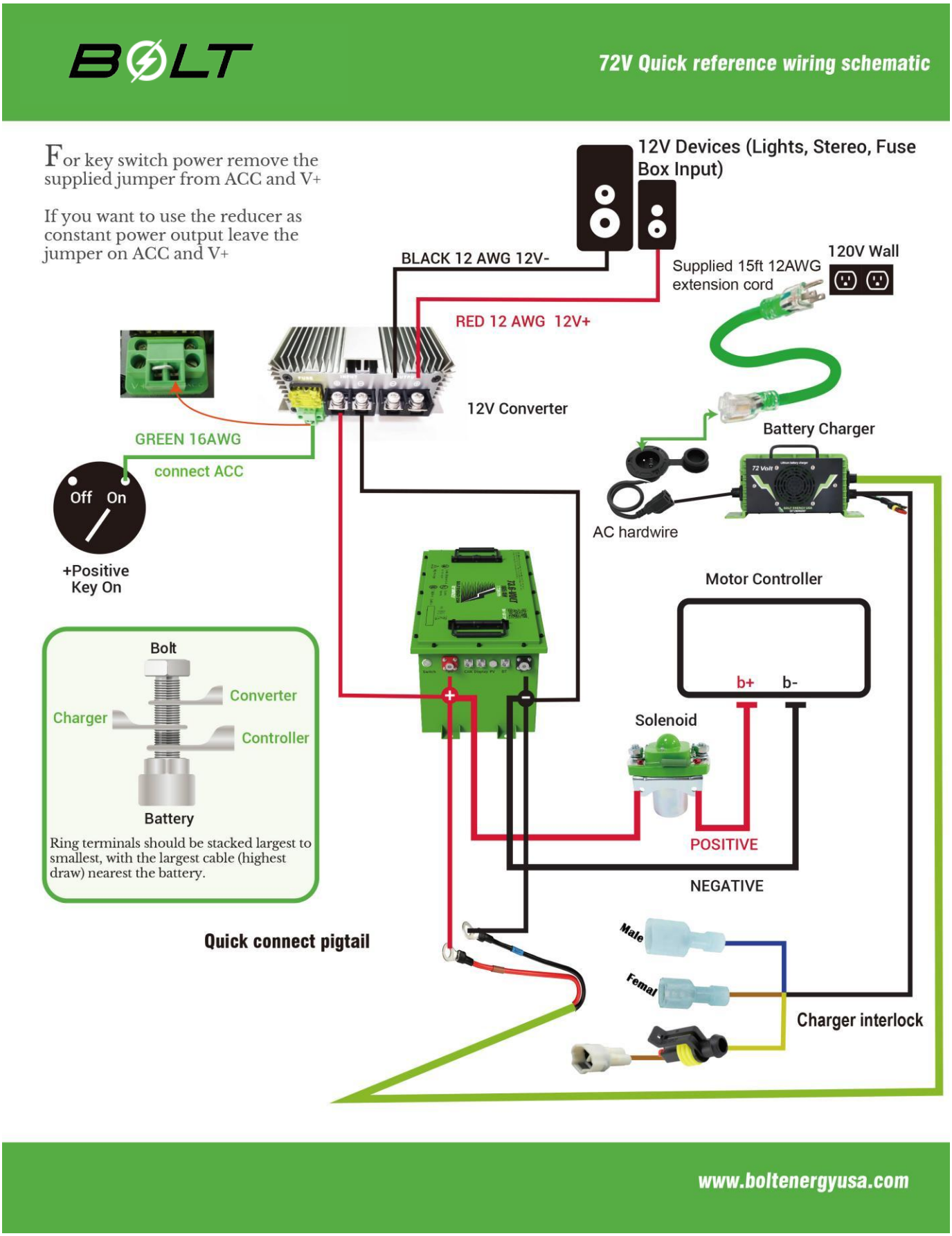

Congratulations, you have now been " Energized

6650 Treeland Ave N Largo FL 33773 · 727-955-4955.
INFO@BOLTENERGYUSA.COM

Parallel diagram

For Model BE10551T, BE10551M, BE10538C, BE16051B,BE10572P,BE6051F

Warning

1) Please ensure two batteries are same Model Bolt Energy batteries and do not parallel with other brand batteries.
2) Maximum 2 packs of batteries connect in parallel.
3) Be sure the voltage difference range of the two batteries needs to be within 0.1V.
It's recommended that both batteries are fully charged when you connect them in parallel.
4) Please ensure the two batteries are same age or new batteries purchased at the same time.
5) Always keep your cart plugged in to the smart charger when not in use, and do not completely discharge the batteries.

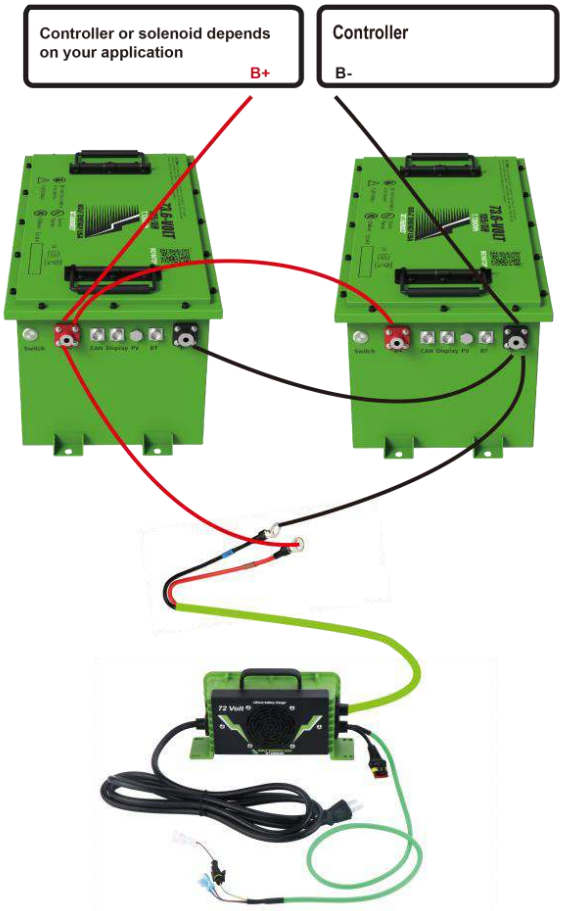

6650 Treeland Ave N Largo FL 33773 · 727-955-4955.
INFO@BOLTENERGYUSA.COM

Golf Cart charger.
Interlock, Sense cable, Signal cable, Charging lockout, etc

A charger interlock on a golf cart is a safety feature designed to prevent the cart from being operated while it's being charged. It typically works by disabling the cart's drive system whenever the charger is connected to the cart's battery system.

Here's how it generally operates:

1. **Connection Detection**: The interlock system detects when the charger is plugged into the cart's charging port.
2. **Interlock Activation**: Once the charger is connected, the interlock system activates, preventing the cart from being driven.
3. **Drive Disablement**: The interlock system disables the cart's drive system, usually by cutting off power to the motor or engaging a mechanical lock.
4. **Indicator**: There might be an indicator, such as a light or a display, to show that the interlock is active and the cart cannot be driven.
5. **Safety Override**: Some systems may include a safety override feature that allows the cart to be operated in emergency situations, but this typically requires manual intervention and may only be accessible by authorized personnel.

Overall, the charger interlock enhances safety by ensuring that the cart is not in motion while it's being charged, reducing the risk of accidents and damage to the cart or charging equipment.

Disclaimer: If you're not a trained professional, please do not attempt to install or modify a charger interlock on a golf cart yourself. Electrical systems can be complex and dangerous if mishandled. Always consult with a qualified technician or electrician for installation or modification of safety features on any vehicle. Improper installation or tampering with electrical systems can result in injury, damage to property, or even death. Safety should always be the top priority when working with electrical components.

For a more detailed understanding, a charger interlock on a golf cart typically involves several components and considerations:

1. **Physical Installation**: The interlock system may require physical installation of components such as sensors, switches, or relays. These may need to be mounted securely within the golf cart's electrical system, often requiring knowledge of wiring and circuitry.
2. **Electrical Integration**: The interlock system must be integrated into the existing electrical system of the golf cart. This could involve connecting the interlock components to key areas such as the charger, battery, motor controller, and drive system.
3. **Programming or Configuration**: In some cases, the interlock system may require programming or configuration to ensure proper operation. This could involve setting parameters such as activation thresholds or safety overrides.
4. **Testing and Calibration**: Once installed, the interlock system should be thoroughly tested to ensure that it functions correctly. This may involve testing the system under various conditions to verify its reliability and effectiveness.
5. **Compliance and Standards**: It's essential to ensure that the interlock system complies with relevant safety standards and regulations. This may include standards for electrical systems, vehicle safety, and industry-specific requirements for golf carts.
6. **Maintenance and Inspection**: Regular maintenance and inspection of the interlock system are crucial to ensure continued safety and reliability. This may involve periodic checks of components, wiring, and connections to identify any issues or wear over time.

Overall, installing a charger interlock on a golf cart requires careful planning, expertise in electrical systems, and a commitment to safety. If you're not experienced in these areas, it's best to consult with a trained professional to ensure that the interlock is installed correctly, and functions as intended.

Charger Troubleshooting Guide

WARNING: IF THE FAN IS MAKING NOISE OR THE FAN IS NOT SPINNING.CHECK THE FAN SHROUD TO MAKE SURE IT IS NOT TOUCHING THE FAN.

DC power side

Start here

When fully connected to the battey. Turn on the battery and plug the charger ac cord into the wall outlet, does the charger have any lights on? Red or Green .

Yes → Check that the DC output connections(M8-Plug) "Quick connect" plug is seated properly/ reseat.

Not Working → If you have M8 quick connect pigtail

With the battery power switch turned on unplug the M8 plug from the charger leaving the ring terminals still connected to the battery post check the plug for voltage 70-84 volt.

Voltage check for M8-Plug

M8 - Plug

Has Voltage → Reprogram Charger

No Voltage → with the battery power switch on check the battery post has 70-84V.

No → Battery Issue

Yes → Reprogram Charger

Working → Charger is now working

AC power side

No → With a meter or some other known working device. Check 110-120vac input power.

No → Check your Home circuit breaker box for a tripped breaker Or check your GFI outlet did not trip.

Yes → If you have C14 connection pictured below. Check the C14 connection that it is seated properly.

Working → Charger is now working

Not Working → Charger is Bad

6650 Treeland Ave N Largo FL 33773 · 727-955-4955.
INFO@BOLTENERGYUSA.COM

10-year Limited Warranty

Bolt Energy USA warrants each Bolt Energy LiFePO4 Lithium battery to be free of manufacture defects for a period of **10-years** ("Space for the Warranty Period") from the shipment date determined by the battery serial number and or invoice from purchase date.

As listed below BOLT ENERGY USA'S prorated description of our 10-year limited warranty. The warranty described is exclusively written for BOLT ENERGY USA. All repairs or replacements will always be at the sole discretion of BOLT ENERGY USA.

1-year on all accessories & complimentary products (chargers, cables, SOC (state of charger meter), Solenoids, voltage reducers, etc.)

Year	**From original purchase date** (MONTHS)	**10-YEARS TOTAL WARRANTY** PERIOD	**TOTAL OUT OF POCKET REPAIR/ REPLACE** ***BE10551M BE10551T***	**TOTAL OUT OF POCKET REPAIR/ REPLACE** ***BE16051B***	**TOTAL OUT OF POCKET REPAIR/ REPLACE** ***BE10572P***	**TOTAL OUT OF POCKET REPAIR/ REPLACE** ***BE10538C BE6051F***
5	0-59	119 MONTHS	$0	$0	$0	$0
6	60 - 71	119 MONTHS	$1,595	$2,095	$2,095	$1,095
7	72 - 83	119 MONTHS	$1,695	$2,195	$2,195	$1,195
8	84 - 95	119 MONTHS	$1,795	$2,295	$2,295	$1,295
9	96 - 107	119 MONTHS	$1,895	$2,395	$2,395	$1,395
10	108 - 119	119 MONTHS	$2,095	$2,595	$2,595	$1,595

NON-TRANSFERABLE

This Limited Warranty is to the original purchaser of the Product and is not transferable to any other person or entity. Please contact the place of purchase regarding any warranty claim. The battery **MUST** be registered through our website within 30 days of purchase (boltenergyusa.com). If battery isn't purchased from an approved Bolt Energy USA dealer. There will be no warranty.

6650 Treeland Ave N Largo FL 33773 · 727-955-4955.
INFO@BOLTENERGYUSA.COM

WARRANTY EXCLUSIONS

Bolt Energy has no obligation under this Limited Warranty for Product subjected to the following conditions (including but not limited to):

- Damage due to improper installation; loose terminal connections, under-sized cabling, incorrect connections (series and parallel) for desired voltage and AH requirements, or reverse polarity connections.
- Environmental damage: inappropriate storage conditions as defined by the Manufacturer; exposure to extreme hot or cold temperatures, fire or freezing, or water damage.
- Damage caused by collision.
- Damage due to improper maintenance; under- or over-charging the Product, dirty terminal connections.
- Product that has been modified or tampered with.
- Product that was used for applications other than which it was designed and intended for, including repeated engine starting.
- Product that was used on an over-sized inverter/charger without the use of a Manufacturer-approved current surge limiting device.
- Product that was under-sized for the application, including an Air Conditioner or similar device having a locked rotor startup up current that is not used in conjunction with a Manufacturer-approved surge-limiting device.
- Product not stored in adherence to the Manufacturer's storage guidelines, including storage of the Product at low state-of-charge.

This Limited Warranty does not cover a Product that has reached its normal end of life due to usage 3000 charge cycles or above which may occur prior to the "Warranty Period". A battery can deliver only a fixed amount of Energy over its life which will occur over different periods of time depending on the application. For example, cycling the battery more than 1 time daily, will cause the normal end of life to occur before the end of the Warranty Period. This warranty does not cover normal performance drop over time.

Bolt Energy reserves the right to deny a warranty claim if the Product is determined, upon inspection, to be at its normal end of life even if within the Warranty Period.

6650 Treeland Ave N Largo FL 33773 · 727-955-4955.
INFO@BOLTENERGYUSA.COM

WARRANTY RETURNS

In the event buyer's battery needs to be returned to Bolt Energy USA for any reason, it must be shipped in an approved lithium-ion hazardous materials UN3480 box with all the proper labels and packaging. Bolt Energy USA recommends customer/dealer to fully insure any return shipment in the case of loss or damage in transit. Customer/dealer shall use a carrier that provides tracking and proof of delivery. Bolt Energy USA can help customer/dealer .

with arranging return shipping for a fee. Any shipment which arrives damaged or without an RMA will be refused or held at the Bolt Energy USA for customer/dealer to file a claim if needed.

Shipping to BOLT ENERGY USA for diagnoses, repair or replacement but not limited to will always be the customers responsibility. If BOLT ENERGY USA has deemed the warranty claim to be valid, BOLT ENERGY USA will pay the return shipping to the customer for the full 10 years.

WARRANTY DISCLAIMER

Bolt Energy's exclusive liability for breach of any warranty on the Battery shall be to replace the Battery within the warranty period in accordance with the terms of this limited warranty. In no event shall Manufacturer be liable for any loss or damages of any other kind, whether direct, incidental, consequential including lost profits, exemplary, special, or otherwise, including any lost profits or removal, shipping, or installation expenses.

LIFETIME TECHNICAL SUPPORT

All customers covered under this warranty shall receive lifetime technical support, including advice on charging, use, storage, and general questions about BOLT ENERGY USA batteries. Technical support is available for as long as the customer owns and is using the BOLT ENERGY USA battery and may be longer than the 10-year warranty period. Technical support is available at:

INFO@BOLTENERGYUSA.COM.

6650 Treeland Ave N Largo FL 33773 · 727-955-4955.
INFO@BOLTENERGYUSA.COM

NON-WARRANTY REPAIRS

Bolt Energy USA will do everything in their means to support their products after the warranty period has expired whenever possible. Customer/dealer costs will include shipping, parts, and labor. Call Bolt Energy USA (727-955-4955) The battery may be required to be shipped back to Bolt Energy USA. An RMA (Return Merchandise Authorization) must be obtained from Bolt Energy USA before any products can be returned. Any battery that arrives without an RMA will be refused and all shipping charges will be the sole responsibility of the customer. The RMA must be clearly marked on the outside of the shipment, or it will be refused. Once buyer has obtained an RMA, all warranty shipments should be shipped to:

Bolt Energy USA

6650 Treeland Ave Largo, Florida 33773

Our unapparelled 10-year warranty on all our batteries.

1. For all returns or warranty claims contact INFO@BOLTENERGYUSA.COM The best battery and warranty on the planet:

   A. Bolt Energy USA always uses premium grade materials and craftsmanship. Bolt Energy USA has completed 1000's of hours of R&D (research and development) to build the most quality, performance energy storage products in the industry. We continue to always stay ahead of the market curves so we can continue to bring you the best. R&D is our ongoing commitment to our customers to be the best.

   B. BOLT ENERGY USA offers a 10-year manufacturers defect warranty from the date of purchase. The average lifespan of a BOLT ENERGY USA LiFePO4 battery is 3000 recharge cycles, or approximately 8-12 years with regular use that is appropriate to what the battery is designed for (see the specifications of the battery). This warranty does not cover negligence or misuse of the battery or normal wear and tear. If BOLT ENERGY USA deems the battery accessories were used improperly, this warranty will be voided.

   C. To submit a warranty claim, please contact the original place of purchase. The battery may be required to be shipped back to BOLT ENERGY USA for a complete inspection.

2. 1 year warranty on all accessories & complimentary products (chargers, cables, SOC (state of charger meter), Solenoids, voltage reducers, etc).

A. Warranty only applies to original owner (non-transferable).

B. If you have any issues with our products, please contact your place of purchase. If you need additional help, contact us at INFO@BOLTENERGYUSA.COM

SOC Installation Instruction

Model: BESOCVer5

1. Product instruction.

The SOC is an abbreviation for “State of charge” The SOC is an extension of the BMS. The BMS is an abbreviation for “Battery management system” The SOC reads real time vital information for the LiFePO4 battery user. Display content：

* Voltage, current

**Battery percentage*

**Low voltage warning*

**Low SOC warning*

When the battery voltage too low, there will be warning beep sound and warning word to remind you to slow down when driving and charge the battery in time.When the battery is charged for 20 seconds, the warning page will be turned to the charging page.

2. Mechanical size diagram.
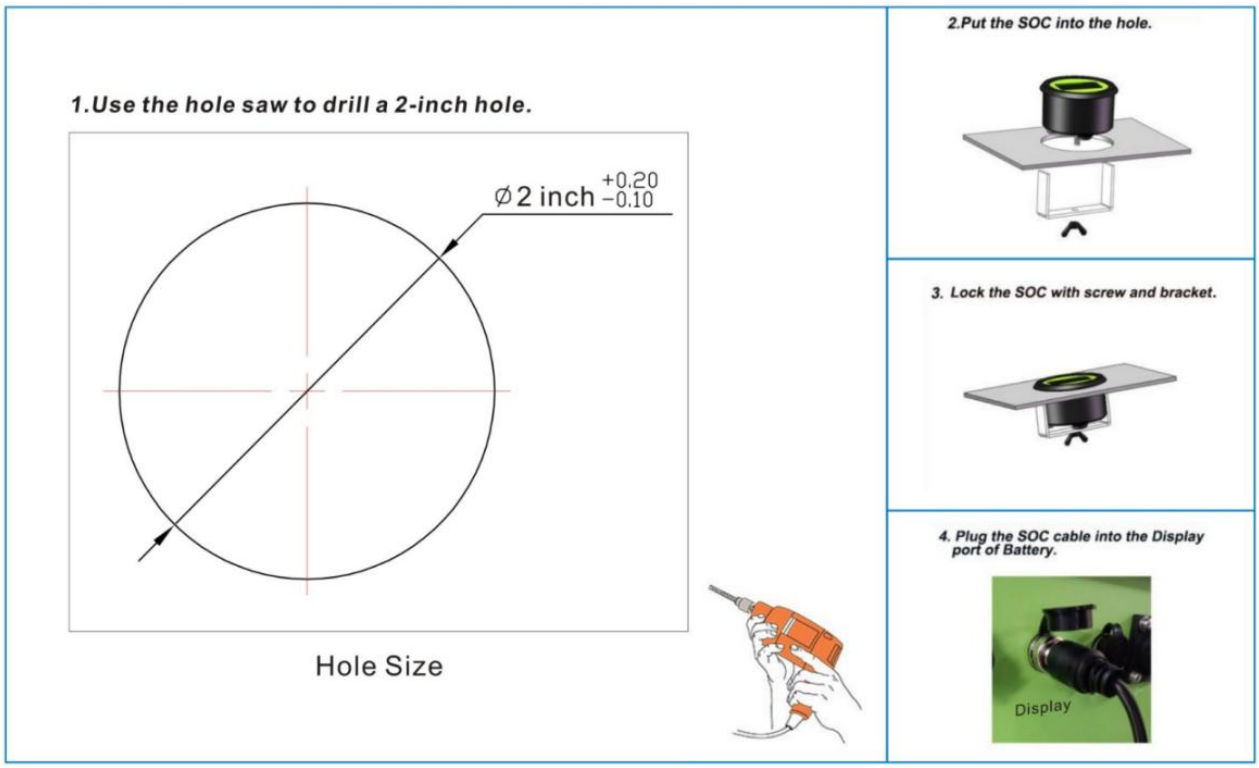
3. Easy Installation.