BOLT

LITHIUM BATTERIES

Models: 33-51105TB, 33-51105TH

105 Ah - 51 Volt

BOLT ENERGY USA LLC
6650 TREELAND AVE • LARGO, FL 33773

BOLT
LITHIUM BATTERIES

Ownership 101

1. **Always keep your vehicle plugged into the Bolt Lithium Battery-approved smart charger when not in use. The charger will automatically manage the process to keep your battery in great condition. It's completely safe to "Always Be Charging" because your battery is designed for it.**

2. **Regularly undercharging the battery can make the SOC meter inaccurate, causing you to run out of power unexpectedly and potentially damaging the battery cells. Always fully charge to 100% before use for optimal performance.**

Scan for Installation Videos

3. **If your vehicle will remain idle for a week or more, charge the battery to 50-80%, disconnect the charger, and turn off the battery by holding the on/off button (located on the battery) or the black button on the SOC display for 3 seconds. To turn it back on, hold the button for 2 seconds. When you're ready to use the vehicle again, reconnect the charger and allow it to charge fully without interruption to recalibrate the SOC meter.**

4. **Only use our products for their intended purpose as recommended by the vehicle manufacturer. If you plan on making modifications to the original design or specs, contact the manufacturer to guarantee safety.**

5. **Do not use an extension cord over 15ft long with a rating below 12AWG. Longer cords with lighter gauge wire will cause heat resistance, increasing the risk of an electrical fire.**

6. **Your battery features an auto-sleep function that activates after 12 hours of inactivity. To wake it, simply use one of the two on/off buttons mentioned above.**

7. **Storage Climate:**

   A. **High-Temperature Storage: Avoid storing the battery in temperatures above 110°F (43°C), as excessive heat may reduce performance and lifespan.**

   B. **Low-Temperature Storage: We recommend not storing the battery in temperatures below 34°F (1°C) for extendedperiods. Never use an external heat source, such as a portable heater, to warm the battery, as this can cause damage or unsafe conditions.**

******Failure to follow these instructions will VOID the warranty and will create operational issues with your battery and vehicle.******

Customer Acknowledgement

Sign: _____ **Date:** _____

Please refer to the following pages for additional information on battery operation, safety precautions, Bluetooth®, installation/wiring diagrams, etc.

BOLT LITHIUM BATTERIES

Models: 33-51105TB, 33-51105TH

FEATURES

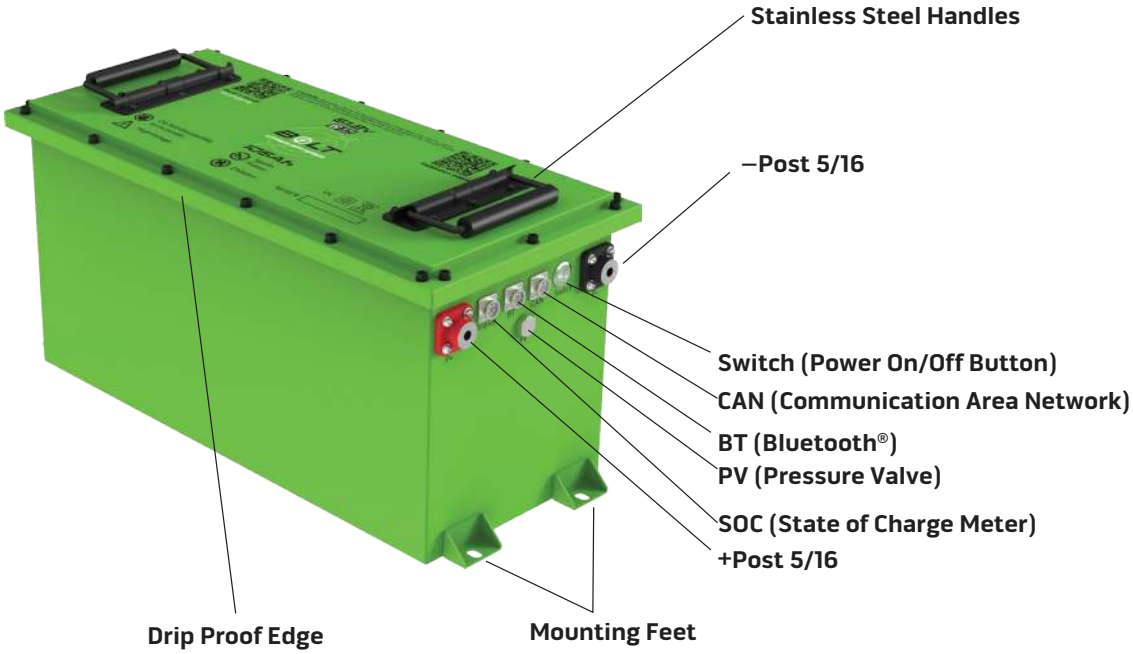

DIMENSIONS

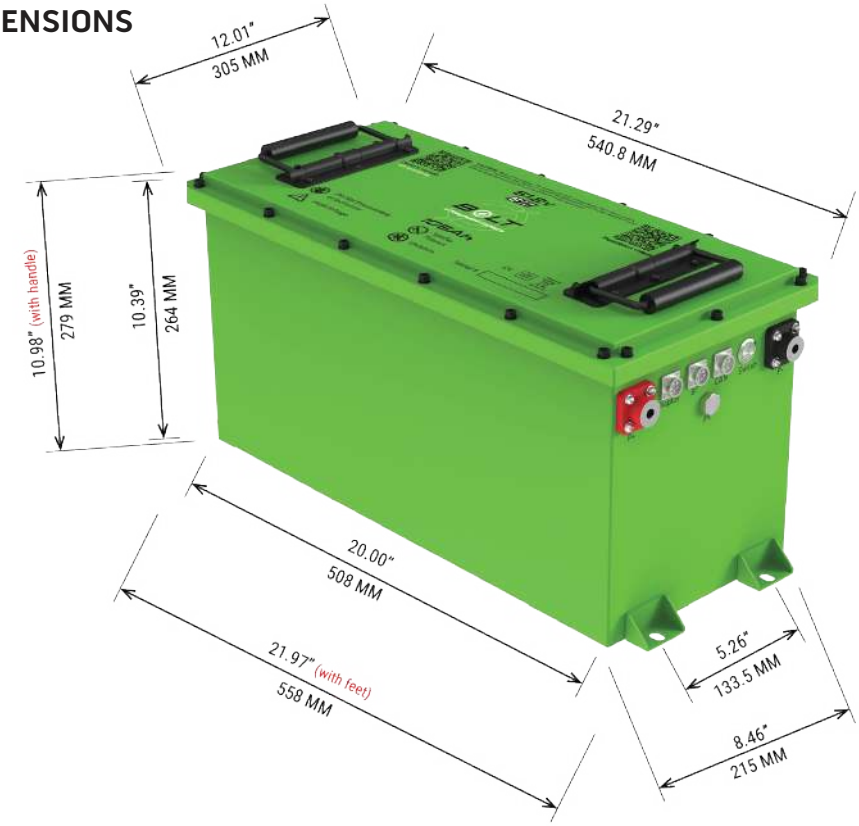

HEATING SYSTEM OPERATING PRINCIPLE

Activation Conditions

The battery heating system is active **only during charging events.** Charging is defined as:

- **External charging via a charger**

Temperature Logic & Control Flow

Temperature Condition	System Action	Design Intent
T < -4°F	Upon charge initiation, the system **activates heating and suspends charging.**	Cold-temperature protection to prevent lithium plating and permanent cell damage.
(-4°F ≤ T ≤ 14°F)	Upon charge initiation, the system **activates both heating and charging simultaneously, but charging is limited to a 45-second duration.**	Provides initial warming while allowing brief charge acceptance. This prevents system shutdown due to unpredictable regen braking events within this critical low-temperature window.
T ≥ 23°F	The system **continues heating while maintaining concurrent charging.**	Ensures efficient warming and charging within a safe thermal range.
T ≥ 32°F	The system **deactivates heating and switches to charging-only mode.**	Battery has reached the optimal operating temperature; heating is disabled to conserve energy.
T > 14°F	Charging proceeds **normally without activating the heating system.**	Battery is already within the standard safe charging temperature range.

System Reset Logic

In case of a **charging interruption** (e.g., unplugging and reconnecting), the BMS will **restart the entire temperature logic sequence** upon re-establishment of the charge input to ensure consistent safety control.

STANDARD KITS INCLUDE:

SOC
(State-of-Charge Meter)

AC Hardwire
Onboard Charge
Adapter

Waterproof Charger w/
Charger Interlock Pigtail

12 AWG 15 Foot
Extension Cord

Deco Plate for
AC Hardwire

Bracket & Hardware

Bluetooth Receiver®

- (2) 5/16 Battery Post with Lock Washers
- (3) - 3/8, (3) 5/16 Battery Ring Terminal
- (10) 10" Tie Straps
- Stickers

BOLT
LITHIUM BATTERIES

PROFESSIONAL KITS INCLUDE:

SOC
(State-of-Charge Meter)

AC Hardwire
Onboard Charge
Adapter

36-51V Bolt 30 AMP
High Output Reducer

72V Bolt 50AMP High
Output Reducer

36-51V-400A
Solenoid with Diode

12 AWG 15 Foot
Extension Cord

Waterproof Charger w/
Charger Interlock Pigtail

Bracket & Hardware

Deco Plate for
AC Hardwire

Lead Battery
Removal Strap

(2) 40" 2AWG Cables

Bluetooth Receiver®

- (2) 5/16 Battery Post with Lock Washers
- (3) - 3/8, (3) 5/16 Battery Ring Terminal
- (10) 10" Tie Straps
- Stickers

BOLT LITHIUM BATTERIES

NORMAL PERFORMANCE

NO.	Item	General Parameter	
1	Rated Capacity	105Ah	
2	Standard voltage	51.2V 16S	
3	Standard Charge Voltage	58.4 V	
4	Charging Method	CC-CV	
5	Charge Current	Normal	100A
		Max	375A
6	Cut-off Voltage	40V	
7	Continuous Discharge Current	250A	
8	Peak Discharge Current	500A (30 Secs)	
9	Total Weight	105 LBS	
10	Impedance at 1000Hz.	≤50mΩ	
11	Charge Method	Charge	14 < T ≤ 131° F
		Discharge	-4 <T≤ 140° F
12	Storage Environment	Temperature	50 - 113°F
		Humidity	≥75%RH
13	Cycle Life	1C@DOD100%	≥2500 cycles
		0.2C@DOD100%	≥4000 cycles
14	Self-discharge Rate	≥3%/Month	
15	Battery Dimension	L = 20.00 IN	
		W = 8.46IN	
		H = 10.98 IN	
16	Bluetooth® Function	Android Phone (System version must be higher than 4.3)	iPhone (System version must be higher than iPhone4S & iOS7)
		In the APP store, install "Bolt USA". You will then be able to read the voltage, SOC, etc. after connecting.	

BOLT LITHIUM BATTERIES

PERFORMANCE & TEST CONDITION

NO.	Project	Standard		Testing Method
1	Rated Capacity	105Ah		After a standard charge, discharge @0.5C current to the end of discharge voltage. Cycles for three times, one cycle capacity arrive standard, that's to say it is qualified. (The below as the same)
2	Charging Storage Ability in Normal Temperature	Rest Capacity ≥ Standard Capacity *97%		After standard charging, store at 77°F ± 41°F for 1 month, and then discharge capacity @0.2C current to the end of discharge voltage, then measure the capacity of cell.
3	Cycle Life	Capacity ≥ Standard Capacity *80%		After standard charge, discharge @0.2C current to the end of the discharge voltage. Rest for 1h, cycles for 4000 times.
4	Internal Impedance	≤50mΩ		At 50% SOC, 1kHz AC internal resistance test instrument.
5	Discharge Temperature Characteristic at 0.2C	-4°F (6h)	≥70%	Discharge capacity at specified temperature/capacity at 77°F
		32°F (6h)	≥90%	
		77°F (4h)	≥100%	
		131°F (4h)	≥97%	

BMS TECHNICAL PARAMETERS

Bolt Energy USA battery is designed with an intelligent protection board solution, which can monitor the battery running status in real time. The protection board has a strong loading capacity, and the maximum discharge current can reach 500A(30 secs). It provides protection against overcharge, over discharge, over current, over temperature, and many others. The battery power input and output are actively cut off for protection. Features are as follows:

- 16-cell battery series protection
- Various protection functions for charging and discharging
- Hardware discharge over current, short circuit protection function processing
- Software over voltage, under voltage, temperature, overload protection function processing
- Accurate SOC (state of charge) calculation with automatic learning SOC (state of charge)function
- Hardware discharge over current, short circuit protection function processing
- With UART (universal asynchronous receiver-transmitter) communication, support for Bluetooth®

BLUETOOTH® APP INTERFACE

The Bolt USA app supports Apple and Android systems, supports English and dual language switching. When Bluetooth® signal is strong, it can be connected within 32 feet. In the APP store install "**Bolt USA**". You will be able to read the voltage, SOC, battery history record, update firmware, send data to email or cloud server for fast after sales service.

Connect to the Bolt USA app using the below steps:

1. **From the App Store, download install the "Bolt USA" app.**

2. **Select the bluetooth number and click to enter the app.**

3. **Plug the Bluetooth® receiver to the "BT" port on the battery and tighten securely.**

4. **App Interface**

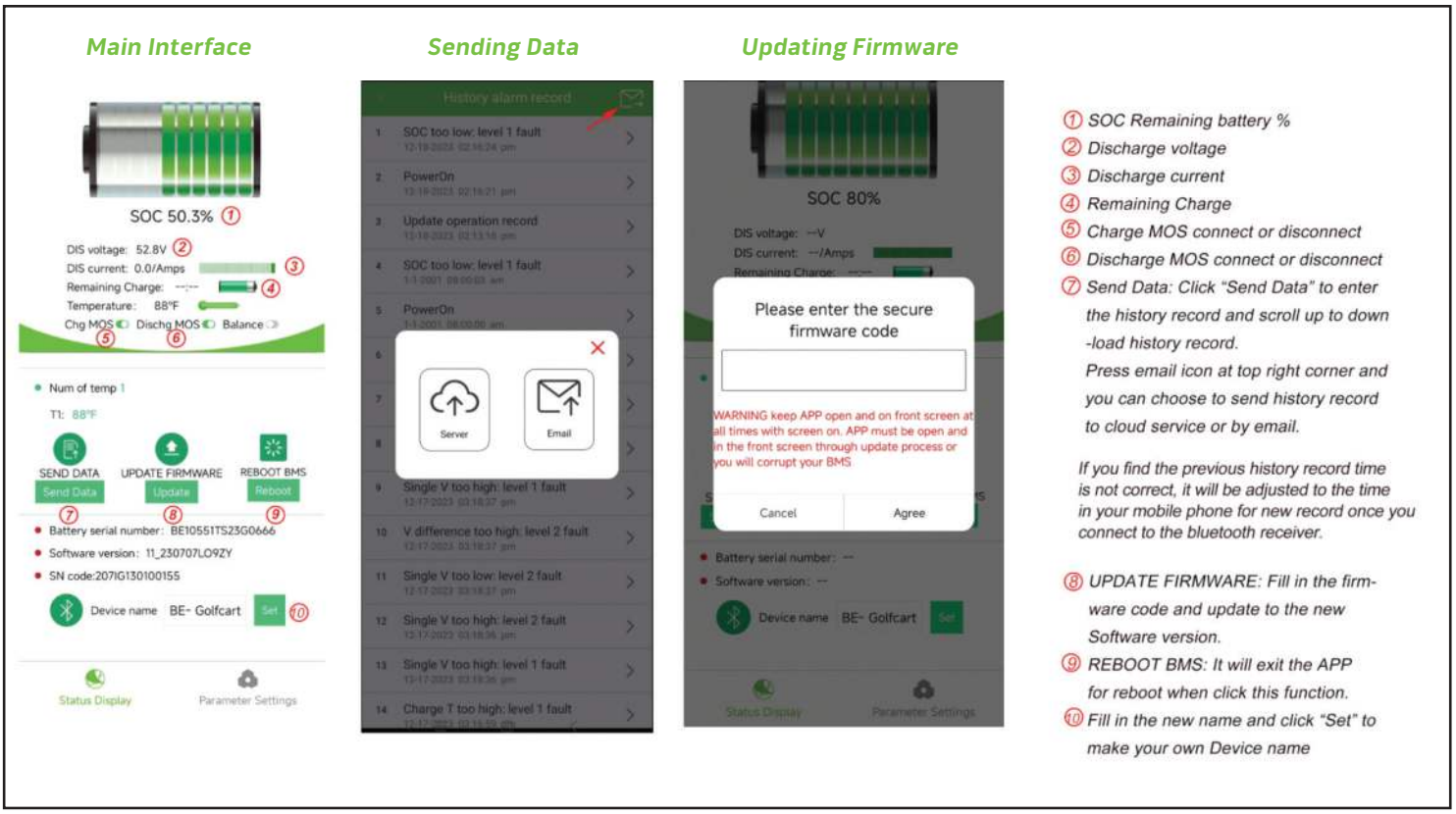

STORAGE AND TRANSPORTATION:

- Proper environment for transportation protocols of the LiFePO4 battery pack need to be followed to protect the Battery and ensure it performs to manufacturer's specs.
- During transportation the Battery should be at 50% SOC to prevent short circuits if there is an accident reducing the risk of fire.
- Battery should be kept at 32°F - 113°F indoors where it's dry, clean, and well-ventilated.
- During the loading and transport of Battery, avoid dropping, turning over or stacking.

SHORT-TERM STORAGE

(Approximately 1 week)

- Best practice: charge to 100% and allow the charger to shut off.
- Disconnect the charger from both the vehicle and AC wall outlet.
- Turn the power button OFF.

LONG-TERM STORAGE

(Approximately 2 weeks or longer)

- Best practice: for storage longer than 3 months, maintain approximately 70% SOC.
- Check every 3 months and recharge to approximately 70% SOC as needed.
- Turn the power button OFF.

WARNINGS AND TIPS:

- In order to prevent the battery from leaking, overheating, and potential explosion, it is vitally important to follow these instructions carefully! Failure to follow these warnings could result in fire, serious personal injury, or death.
- Never throw the battery into water or otherwise expose to water, keep it under dry, shady, and cool conditions.
- Never reverse the positive and negative post connection.
- Never connect the positive and negative posts of the battery with unapproved wiring.
- Never ship or store the battery together with metal that could contact the posts.
- Never knock, throw, or trample the battery.
- Never drill, cut, puncture or bolt through the battery case.

- Caution: Risk of Fire or Burns. Do Not Disassemble or Heat Above 70C(158 F),crunch, puncture or incinerate. Keep Battery in original packaging until ready to use.
- Dispose of used batteries properly according to local recycling or waste regulations.
- When working with the Battery,do not put wrenches or other metal objects across the Battery terminals. An arc can occur causing an explosion or fire at the Battery.
- Always remove the negative (-) cable to a motor controller first, and install it last. A spark can occur causing an explosion or fire at the battery.
- Do not allow charging Battery to be immersed in water or liquids. Failure to follow this warning could result in fire, serious personal injury or death.
- Do not attempt to open the Battery. Failure to follow this warning could result in fire, serious personal injury or death.
- Install charging equipment in compliance with local regulations. Failure to follow this instruction could result in personal injury, death or property damage.
- Make sure any electrical outlet used for charging your Battery is properly grounded. Check with a qualified electrician if you are uncertain whether or not the electrical outlet is properly grounded. Do not modify the plug provided with the product if it does not fit in the outlet. Have a proper outlet installed by a qualified electrician.
- It is recommended that electrical outlets for use with your charger be installed by a licensed, qualified electrician. To avoid serious injury or death, installation must comply with the provisions of the National Electric Code (NEC) and all local codes. In cases of conflict between local codes and the NEC, local codes shall take precedence.
- Never use the charger with an extension cord longer than 15ft or rated below 12 AWG.
- Shock hazard - make sure the plug is fully inserted into the wall outlet so that there are no exposed blade surfaces.
- Children should be supervised when in the vicinity of the charger while plugged in. Do not put fingers into the electric charge coupler or any electrical outlet.
- Do not expose the charge cord to flammable vapors.
- Be sure to have proper ventilation when charging batteries.
- Never use or keep the battery under high temperatures. Otherwise, it will cause battery to heat, catch on fire, or lose some function and reduce the life. The necessary temperature for long-term storage is 32-113°F.
- Never throw the battery into fire or a heating machine. This type of action could lead to fire, explosion, and environmental pollution; scrap Batteries should be returned to the supplier or handled by a qualified recycling station.
- Never use the battery near strong static and strong magnetic fields, otherwise it will damage the BMS (Battery Management System).
- If the Battery leaks and the electrolyte gets into your eyes, avoid touching your eyes, instead please wash eyes with water and seek emergency medical attention ASAP.Otherwise, it can cause eye damage.

- If the Battery emits an odor, excessive heat, or anything abnormal during use, storage, or charging, please disconnect the charger, turn the Battery switch to the off position and call Bolt Lithium Batteries for immediate support, do not use the Battery.
- ONLY use the charger provided by Bolt Lithium Batteries when charging.
- Check the voltage of Battery and relevant connectors before using. It cannot be used until everything is connected properly.
- Prior to charging, fully check to make sure the wires and surrounding insulation are intact. Make sure the charging cord is securely plugged in the AC wall outlet. Do not attempt to charge if SOC meter is below 40V as this is abnormal, disconnected the charger, turn off the Battery, and contact Bolt Lithium Batteries for immediate support.
- The Battery should be stored at 50%-70% SOC and must be charged once every 6 months to avoid severe discharge or damage not covered by warranty.
- Clean dirty or corroded terminal posts with a clean dry cloth to prevent resistance, heat build up, and potential damage to the Battery.
- Never run Batteries in series. If you do, your warranty will be VOID.
- Two of our Batteries in parallel will work and we recommend you seek proper installation guidance from Bolt Lithium Batteries.
- We do not recommend using our Products for anything not recommended by the original manufacturer of your Vehicle (Golf Cart, RV, Boat, Etc). If you have intentions of making any modifications to the original Vehicle design or specification, we highly recommend you first verify with the OEM of the Vehicle it is safe to do so.
- **Failure to follow these recommendations will VOID your battery warranty.**

Basic Universal Installation Instructions

- **51V - 105Ah** *33-51105SB, 33-51105SH*
- **51V - 105Ah** *33-51105ST, 33-51105TH*
- **38V - 105Ah** *33-38105SB, 33-38105SH*
- **51v - 168 Ah** *33-51168SB, 33-51168SH*
- **72V - 105Ah** *33-72105SB, 33-72105SH*
- **51V - 60Ah** *33-51060SB, 33-51060SH*

Caution:

* **We recommend you contact a licensed professional for any electrical installations or modifications.**

* **If you choose to install your new BOLT ENERGY USA lithium Battery, we highly recommend two-person installation and back braces.**

* **Safety glasses and chemical resistant gloves are a necessary safety precaution for any Battery installation.**

1. Remove the old batteries.

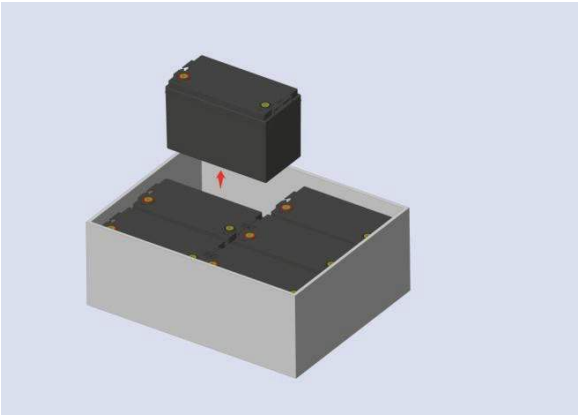

2. Install the supplied brackets. Mount the brackets in battery box or tray using the supplied stainles hardware.

   Note: Drilling is required.

   Caution: Do not drill into the battery!

3. Install your Bolt lithium battery on the brackets using the supplied 5/16 bolts. Install all 4 bolts and hand tighten until snug. Once all bolts are snug, fully tighten with a ¼ turn.

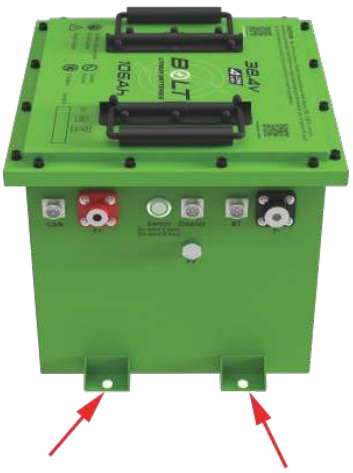

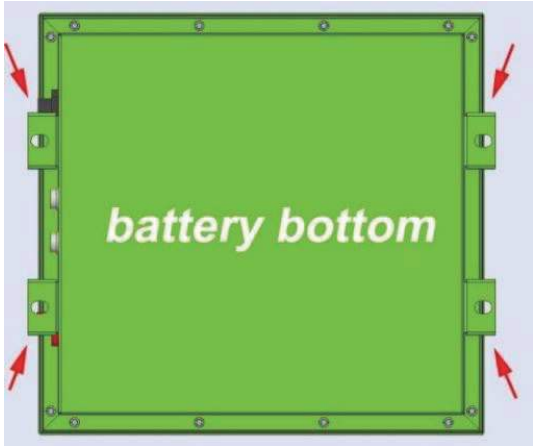

4. Install your positive and negative battery and charger cables (red to positive, black to negative). Using a torque wrench, tighten to 132 in-lbs (11ft-lbs). Note: DO not over tighthen!

5. See SOC (State of Charge Meter) installation instructions included in this manual below.

6. **IMPORTANT:** Charge battery to 100% before first use.

7. See wiring diagram on next page for information on wiring the solenoid, voltage reducer, and other components.

36V/48V Quick Reference Wiring Schematic

Connect the Green wire to a switched B+ power, source (such as the ON side of key switch). Alternatively, if constant 12V power is required, connect the blue wire as seen in the diagram.

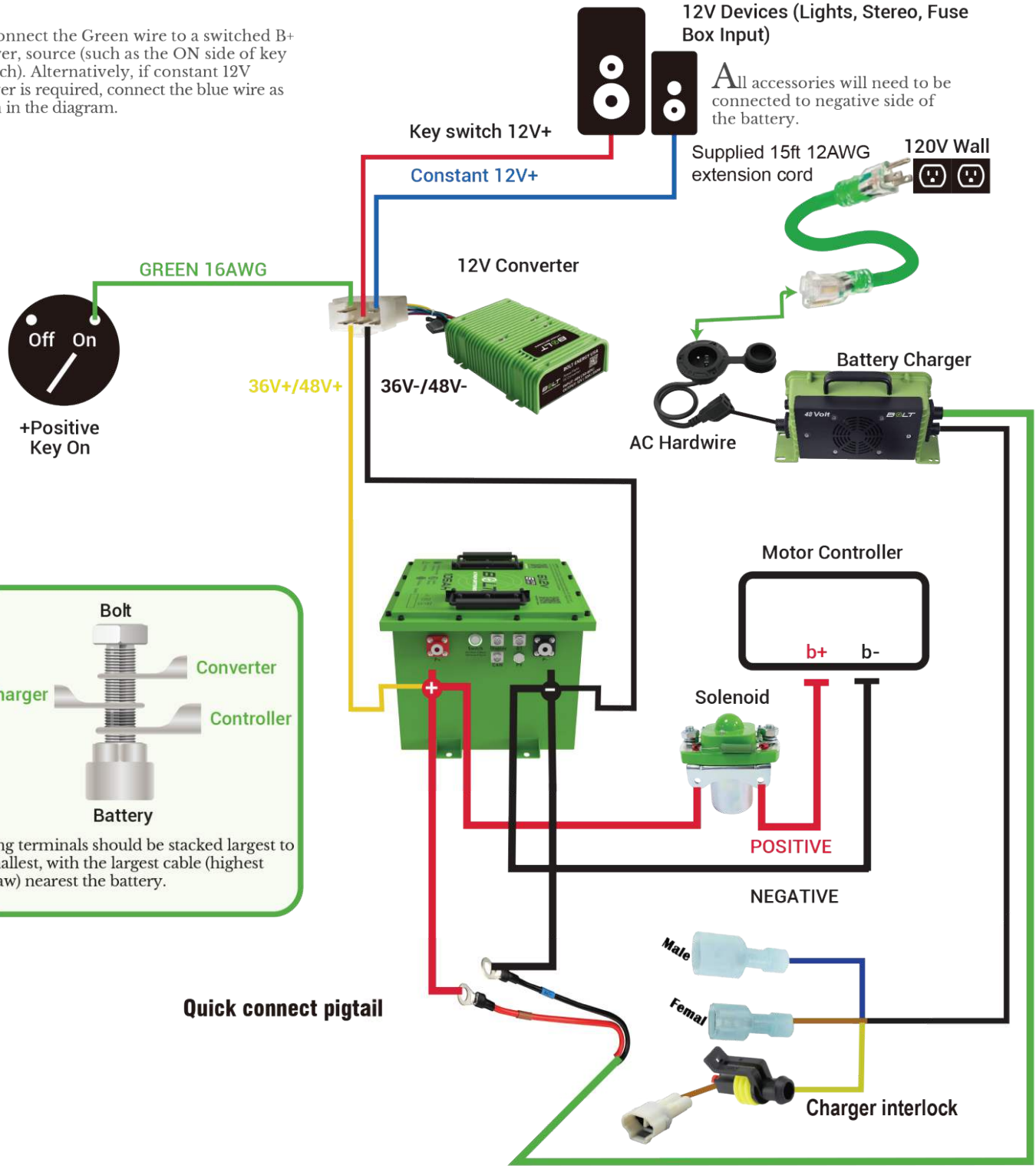

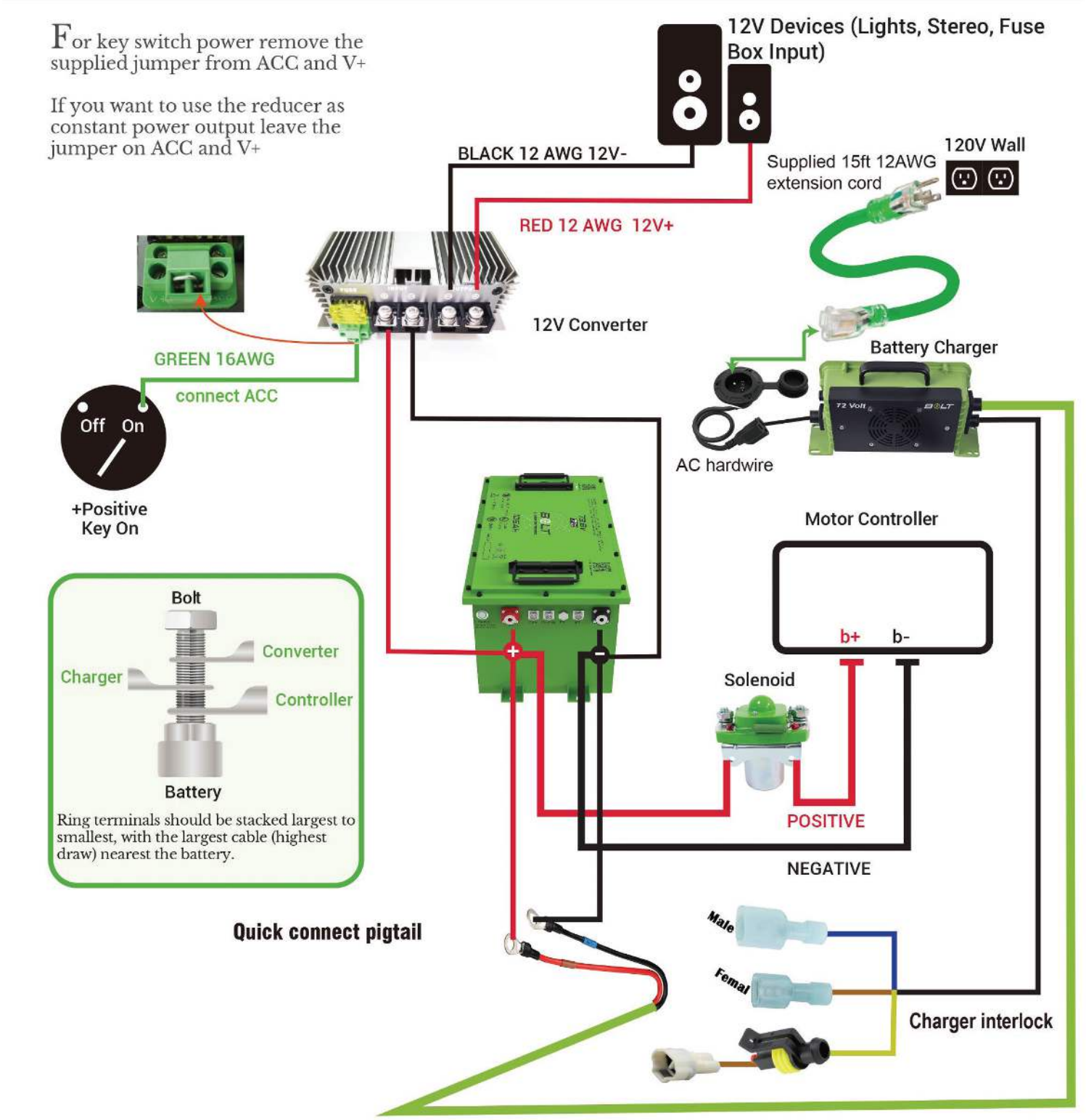
For key switch power remove the supplied jumper from ACC and V+
If you want to use the reducer as constant power output leave the jumper on ACC and V+
12V Devices (Lights, Stereo, Fuse Box Input)
BLACK 12 AWG 12V-
RED 12 AWG 12V+
120V Wall
Supplied 15ft 12AWG extension cord
12V Converter
GREEN 16AWG
connect ACC
Off On
+Positive Key On
Battery Charger
AC hardwire
Motor Controller
b+
b-
Solenoid
POSITIVE
NEGATIVE
Bolt
Converter
Charger
Controller
Battery
Ring terminals should be stacked largest to smallest, with the largest cable (highest draw) nearest the battery.
Quick connect pigtail
Male
Femal
Charger interlock

Parallel Operation

For Models: 33-51105SH, 33-51105SB, 33-51105TH, 33-51105TB, 33-51160SH, 33-51160LB, 33-51168LH, 33-51168, SB33-72105LH, 33-72105LB, 33-38105SH, 33-38105SB

1) **Please ensure two batteries are same model Bolt batteries and do not parallel with other brand batteries.**
2) **Maximum 2 packs of batteries connect in parallel.**
3) **Be sure the voltage difference range of the two batteries is within 0.1V. It's recommended that both batteries are fully charged when you connect them in parallel.**
4) **Please ensure the two batteries are same age or new batteries purchased at the same time.**
5) **Always keep your cart plugged in to the smart charger when not in use, and do not completely discharge the batteries.**

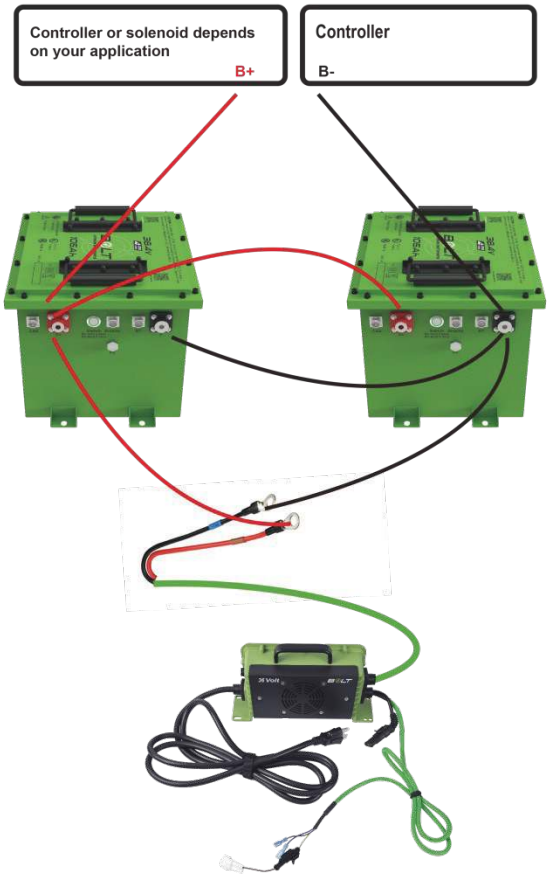

Note: Only one SOC is needed for a parallel battery application.

Lithium Battery Charger

Interlock, Sense Cable, Signal Cable, Charging Lockout, ETC.

A charger interlock on a golf cart is a safety feature designed to prevent the cart from being operated while it's being charged. It typically works by disabling the cart's drive system whenever the charger is connected to the cart's battery system.

Here's how it generally operates:

1. **Connection Detection:** The interlock system detects when the charger is plugged into the cart's charging port.

2. **Interlock Activation:** Once the charger is connected, the interlock system activates, preventing the cart from being driven.

3. **Drive Disablement:** The interlock system disables the cart's drive system, usually by cutting off power to the motor or engaging a mechanical lock.

4. **Indicator:** There might be an indicator, such as a light or a display, to show that the interlock is active and the cart cannot be driven.

5. **Safety Override:** Some systems may include a safety override feature that allows the cart to be operated in emergency situations, but this typically requires manual intervention and may only be accessible by authorized personnel.

Overall, the charger interlock enhances safety by ensuring that the cart is not in motion while it's being charged, reducing the risk of accidents and damage to the cart or charging equipment.

Disclaimer: If you're not a trained professional, please do not attempt to install or modify a charger interlock on a golf cart yourself. Electrical systems can be complex and dangerous if mishandled. Always consult with a qualified technician or electrician for installation or modification of safety features on any vehicle. Improper installation or tampering with electrical systems can result in injury, damage to property, or even death. Safety should always be the top priority when working with electrical components.

For a more detailed understanding, a charger interlock on a golf cart typically involves several components and considerations:

1. **Physical Installation**: The interlock system may require physical installation of components such as sensors, switches, or relays. These may need to be mounted securely within the golf cart's electrical system, often requiring knowledge of wiring and circuitry.

2. **Electrical Integration**: The interlock system must be integrated into the existing electrical system of the golf cart. This could involve connecting the interlock components to key areas such as the charger, battery, motor controller, and drive system.

3. **Programming or Configuration**: In some cases, the interlock system may require programming or configuration to ensure proper operation. This could involve setting parameters such as activation thresholds or safety overrides.

4. **Testing & Calibration**: Once installed, the interlock system should be thoroughly tested to ensure that it functions correctly. This may involve testing the system under various conditions to verify its reliability and effectiveness.

5. **Compliance & Standards**: It's essential to ensure that the interlock system complies with relevant safety standards and regulations. This may include standards for electrical systems, vehicle safety, and industry-specific requirements for golf carts.

6. **Maintenance & Inspection**: Regular maintenance and inspection of the interlock system are crucial to ensure continued safety and reliability. This may involve periodic checks of components, wiring, and connections to identify any issues or wear over time.

Overall, installing a charger interlock on a golf cart requires careful planning, expertise in electrical systems, and a commitment to safety. If you're not experienced in these areas, it's best to consult with a trained professional to ensure that the interlock is installed correctly, and functions as intended.

BOLT LITHIUM BATTERIES

SOC INSTALLATION INSTRUCTIONS

Model: 33-015

1. Product Installation

The SOC is an abbreviation for “State of charge” The SOC is an extension of the BMS. The BMS is an abbreviation for “Battery management system”. The SOC reads real time vital information for the LiFePO4 battery user.

Display content :

Voltage, Current
Battery Percentage
Low Voltage Warning
Low SOC Warning

When the battery voltage too low, there will be warning beep sound and warning word to remind you to slow down when driving and charge the battery in time. When the battery is charged for 20 seconds, the warning page will be turned to the charging page.

2. Mechanical Size Diagram

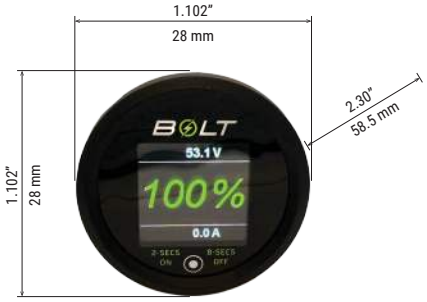

POWER BUTTON – IF EQUIPPED

Some SOC displays are equipped with a power button.

Turn **ON**: Press and hold for **2** seconds
Turn **OFF**: Press and hold for **8** seconds.

3. Easy Installation

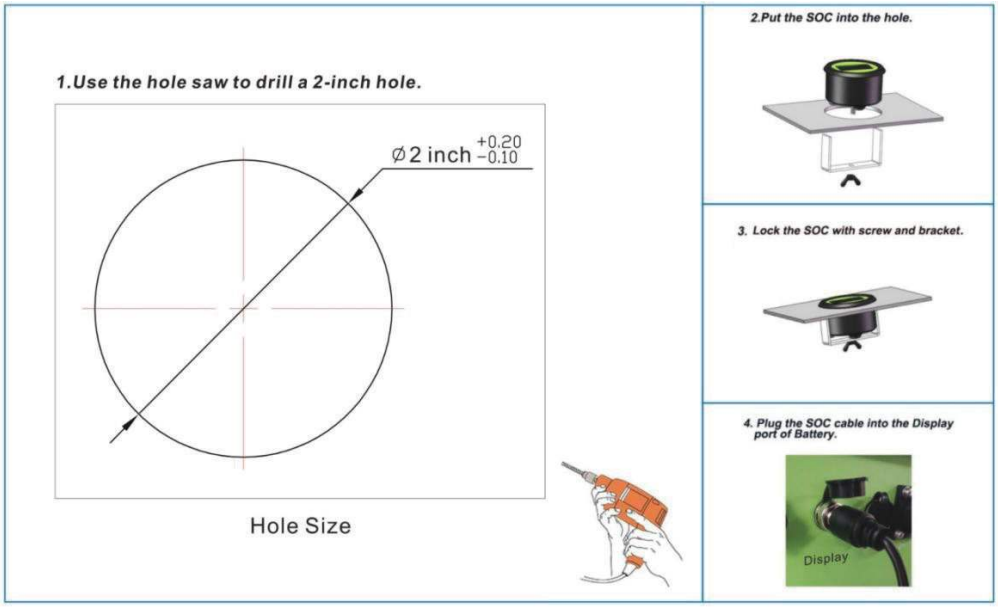

12-Year Limited Warranty
(Effective on batteries purchased 2026 or later)

Nivel Parts and Manufacturing, LLC ("Nivel") warrants each Bolt Energy LiFePO4 Lithium battery ("Product" or "Battery") to be free of manufacture defects in material or workmanship for a period of twelve (12) Years from the date that the Battery is registered via serial number on the Company's official web portal (https://boltenergyusa.com/battery-warranty- registration/). If the Battery is not registered within thirty (30) days of purchase, this warranty is limited to two (2) years from the original purchase date, as determined by the Battery serial number and/or invoice.

Nivel's prorated description of our 12-Year limited warranty is listed below. The warranty described is exclusively written for Nivel. All repairs or replacements will always be at the sole discretion of Nivel.

Warranty Period	12 Years
Full Replacement Period	6 Years
Prorated Period	6 Years
Transferable (Y/N)	Yes. Must register each Transfer within 15 days of ownership change.
Proration Schedule	Year - 7 and 8 = 45% of Current IMAP
	Year - 9 and 10 = 60% of Current IMAP
	Year - 11 and 12 = 70% of Current IMAP

Nivel warrants each LiFePO4 Lithium battery charger to be free of manufacture defects for a period of two (2) years from the shipment date determined by the battery charger serial number and/or invoice from purchase date.

Nivel warrants all accessories & complimentary products (cables, SOC (state of charger meter), solenoids, voltage reducers, etc.) to be free of manufacture defects for a period of one (1) year from the shipment date determined by the invoice from purchase date.

TRANSFERABILITY

Full Term Portability: Subject to the limitations and requirements discussed below, this Twelve (12) Year Limited Warranty is fully transferable to subsequent owners. It is the express intent of this provision that the original Twelve (12) Year Warranty Period, as established from the initial date of registration by the first retail end-user, shall remain intact and continue in full force and effect for the benefit of subsequent owners, subject to the registration requirements set forth below.

Mandatory Transfer Registration: To give effect to the transfer of the remaining balance of the twelve (12) year term, any subsequent owner must register both the Battery and the vehicle housing the Battery via serial number on the Company's official web portal (https://boltenergyusa.com/battery-warranty-registration/) within fifteen (15) days of the date of title transfer or bill of sale. If the original purchaser did not properly and timely register the Battery and/or provide the serial number for the vehicle housing the Battery, then Full Term Portability does not apply, and the subsequent owner shall have no rights to take advantage of any remaining balance of the warranty. Additionally, if the vehicle serial number in the subsequent owner's registration does not match the vehicle serial number in the original owner's registration, then Full Term Portability does not apply, and the subsequent owner shall have no rights to take advantage of any remaining balance of the warranty.

Continuity of Coverage: Provided that the subsequent owner complies with the fifteen (15) day registration requirement, all rights, remedies, and duration of the Twelve (12) Year Limited Warranty shall be preserved without interruption. Failure to timely register the battery and the vehicle housing the battery within the specified fifteen (15) day window may, at Nivel's sole discretion, result in the voiding of any remaining warranty coverage.
Authorized Dealers Only: This Warranty is strictly limited to products originally purchased from an approved Nivel dealer or website. Products purchased through unauthorized third parties or "gray market" sellers are excluded from all warranty coverage.

Authorized Dealers Only: This Warranty is strictly limited to products originally purchased from an approved Nivel dealer or website. Products purchased through unauthorized third parties or "gray market" sellers are excluded from all warranty coverage.

WARRANTY EXCLUSIONS

Nivel has no obligation under this Limited Warranty for a Bolt Energy LiFePO4 Lithium battery subjected to the following conditions (including but not limited to):

Damage due to improper installation, including but not limited to loose terminal connections, under-sized cabling, incorrect connections (series and parallel) for desired voltage and AH requirements, or reverse polarity connections

Environmental damage: inappropriate storage conditions as defined by the Manufacturer; exposure to extreme hot or cold temperatures, fire or freezing, or water damage

Damage caused by collision or accident

Damage due to improper maintenance of any kind

Damage caused by accidental or intentional overcharging

Damage due to dirty terminal connections

Product that has been modified or tampered with, including but not limited to using special additives

Product shows indications that it has been disassembled or opened

Product that was used for applications other than which it was designed and intended for, including repeated engine starting

Product that was used on an over-sized inverter/charger without the use of a Manufacturer- approved current surge limiting device

Product that was under-sized for the application, including an Air Conditioner or similar device having a locked rotor startup up current that is not used in conjunction with a Manufacturer-approved surge-limiting device

Product that was not stored in adherence to the Manufacturer's storage guidelines, including storage of the Product at low state-of-charge

Product has not been charged for over one (1) year

Product has been stolen

This Limited Warranty does not cover a Product that has reached its normal end of life due to usage 3,000 charge cycles or above which may occur prior to the Warranty Period. A battery can deliver only a fixed amount of Energy over its life which will occur over different periods of time depending on the application. For example, cycling the battery more than 1 time daily, will cause the normal end of life to occur before the end of the Warranty Period. This warranty does not cover normal performance drop over time.

WARRANTY RETURNS

To submit your warranty claim, visit us at: https://boltenergyusa.com/support-ticket/

In the event a buyer's battery needs to be returned to Nivel, it must be shipped in an approved lithium-ion hazardous materials UN3480 box with all the proper labels and packaging. Nivel recommends that customers should fully insure any return shipment in the case of loss or damage in transit. Customers shall use a carrier that provides tracking and proof of delivery. Any shipment which arrives damaged or without a Return Merchandise Authorization (RMA) will be refused and all shipping charges will be the sole responsibility of the customer. The RMA must be clearly marked on the outside of the shipment, or it will be refused. Once owner has obtained an RMA, all warranty shipments should be shipped to:

Bolt Energy Products
c/o Nivel
6650 Treeland Ave Largo, Florida 33773

Customers can request that Nivel send them a crate/box to return the battery back to them in connection with a warranty claim. For customers in the United States, with the exception of Hawaii and Alaska, there will be a crate charge of $150.00 plus the freight to customer. For customers outside of the continental United States, please contact Nivel for shipping information.

Shipping to Nivel for diagnoses, repair, or replacement will always be the customers' responsibility. If Nivel has deemed the warranty claim to be valid, Nivel will pay the return shipping to any customers located in the continental United States for the full 12 years.

INTERNATIONAL WARRANTY RETURNS

For international warranty claims, return of the battery is generally not required. Instead, the product must be evaluated by Nivel's technical team or an approved authorized distributor to confirm manufacturer defect for warranty eligibility.

Nivel may require supporting documentation, including photos, videos, diagnostic information, or other evidence reasonably necessary to assess the claim. In some cases, Nivel may also require proof that the battery has been permanently taken out of service.
Because lithium batteries are regulated hazardous materials, customers must not destroy, disassemble, or otherwise handle the battery in an unsafe manner. Any required disposal must be completed in accordance with local laws and safety regulations. Additional documentation may be required before warranty credit or replacement is approved.

WARRANTY DISCLAIMER/LIMITATION OF LIABILITY

Nivel's exclusive liability for breach of any warranty, whether statutory, express or implied warranties, including, without limitation, any warranty of merchantability or fitness for a particular purpose, on the Battery shall be to replace the Battery within the Warranty Period or Pro-Rated Period (as set forth above) in accordance with the terms of this limited warranty. In no event shall Nivel be liable for any loss or damages of any other kind, whether direct, incidental, consequential including lost profits, exemplary, punitive, special, or otherwise, including any lost profits or removal, shipping, installation or towing expenses, diagnostic system tests, rental vehicles, labor, loss of time, loss of use of a vehicle, damage to property other than the Battery, or any personal injuries whatsoever of any kind.

EXCEPT FOR THE LIMITED WARRANTY SET FORTH ABOVE, NIVEL MAKES NO WARRANTY WHATSOEVER WITH RESPECT TO THE BATTERY, INCLUDING ANY (A) WARRANTY OF MERCHANTABILITY; OR (B) WARRANTY OF FITNESS FOR A PARTICULAR PURPOSE; WHETHER EXPRESS OR IMPLIED BY LAW, COURSE OF DEALING, COURSE OF PERFORMANCE, USAGE OF TRADE OR OTHERWISE.

LIFETIME TECHNICAL SUPPORT

All customers covered under this warranty shall receive lifetime technical support, including advice on charging, use, storage, and general questions about Bolt Energy batteries. Technical support is available for as long as the customer owns and is using a Bolt Energy battery and may be longer than the 12-year warranty period. Technical support is available at: INFO@BOLTENERGYUSA.COM or by calling 727-955-4955.

Severability. If any provision in this Limited Warranty is held to be invalid under applicable law, the remainder of the provisions in this Limited Warranty will remain in effect.

Governing Law. Any claims regarding that the purchase, performance, or warranty of a Bolt Energy LiFePO4 battery will be governed by the laws of the State of Florida without regard to conflict of laws rules.

ARBITRATION PROVISION. Agreement to Arbitrate Disputes: This Arbitration Provision sets forth the circumstances and procedures under which Claims (defined below) that arise between you and us will be resolved through binding arbitration; provided, however, that this provision does not apply if, on the date this Agreement is issued, you are covered by the federal Military Lending Act as a member of the Armed Forces or a dependent of such a member. UNLESS YOU OPT OUT OF THIS ARBITRATION PROVISION AS PROVIDED BELOW OR EXCEPT AS APPLICABLE LAW PROHIBITS US FROM IMPOSING BINDING ARBITRATION ON YOU, NEITHER YOU NOR WE WILL HAVE THE RIGHT TO LITIGATE A CLAIM IN COURT OR HAVE A JURY TRIAL ON A CLAIM. OTHER RIGHTS THAT YOU WOULD HAVE IN COURT ALSO MAY NOT BE AVAILABLE OR MAY BE LIMITED IN ARBITRATION, INCLUDING YOUR RIGHT TO APPEAL AND YOUR ABILITY TO PARTICIPATE IN A CLASS ACTION.

As used in this Arbitration Provision, the term "Claim" means and includes any claim, dispute or controversy of every kind and nature, whether based in law or equity, between you and us arising from or relating to your purchase, use, and warranty of a Bolt Energy USA LiFePO4 lithium battery, including the validity, enforceability or scope of this Arbitration Provision. Any Claim will be resolved, upon the election by you or us, by arbitration pursuant to this Arbitration Provision and the code of procedures of the national arbitration organization to which the Claim is referred in effect at the time the Claim is filed (the "Code"), except to the extent the Code conflicts with the Agreement. Claims must be referred to either JAMS or The American Arbitration Association ("AAA"), as selected by the party electing to use arbitration. For a copy of the procedures, to file a Claim or for other information about these organizations, contact (1) JAMS at 1920 Main Street, Suite 300, Irvine, CA 92614; www.jamsadr.com or (2) AAA at 335 Madison Avenue, New York, NY 10017, www.adr.org.

Class Action Waiver: You and Bolt Energy USA further agree that any claim or dispute between you and Bolt Energy that is related to the purchase, use, performance, warranty, or return of your Bolt Energy LiFePO4 battery will only be asserted in an individual capacity. You agree that you will not pursue any class arbitration, class action, or other aggregate or representative proceeding seeking relief on behalf of anyone other than yourself or itself.

WARNING: Lithium batteries can expose you to certain chemicals which are known to cause cancer and birth defects or other reproductive harm. Wash hands after handling. For more information, go to www.P65Warnings.ca.gov