Pre-MCOR to MCOR4 (Motor Controller Output Regulator) Kit Installation Instructions

PowerDrive® System 48™ and DS PowerDrive Plus® vehicles with serial numbers lower than 0112-001470 with the following Serial Number Prefix:

• A, E, F, H, J, K, L, M, S, T

These instructions apply to the following kits:

AM293201

Publication
103952001

Edition Code
1211C1113B

Verify that this kit is intended for your vehicle: make sure your vehicle's serial number prefix (1) appears on the front cover of this publication **(Figure 1)**.

The serial number of each vehicle is printed on a bar code decal mounted either below the passenger side cup holder or above the accelerator or brake pedal (Example: PH0901-583947) The two letters (1) at the beginning of the serial number indicate the vehicle model. The following four digits (2) indicate the model year and production week during which the vehicle was built. The six digits (3) following the hyphen represent the unique sequential number assigned to each vehicle built within a given model year.

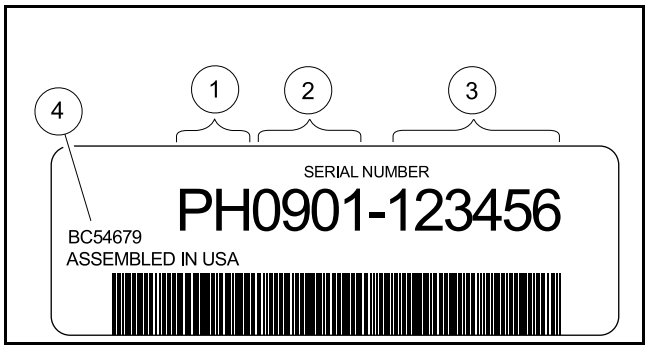

1400.eps

Figure 1 Serial Number Decal

This kit replaces kit part number 102248401. These instructions pertain to PowerDrive® System 48™ and DS PowerDrive Plus® electric vehicles with serial numbers lower than 0112-001470.

This kit can replace either of two controller input configurations: the continuously variable potentiometer, a small black unit located under the floor board near the accelerator pedal, or the multi-step potentiometer, which is a wiper switch located on the frame next to the batteries. Because motor controller output regulator replacement procedures are different for the two configurations, these instructions must be followed carefully. Because the voltage limiter, located under the passenger side floorboard on some vehicles with headlights, will be relocated, a new voltage limiter gasket will be required. Have the appropriate Maintenance and Service Manual (s) for your vehicle on hand before beginning this kit installation.

⚠ DANGER

- **Battery – Explosive gases! Do not smoke. Keep sparks and flames away from the vehicle and service area. Ventilate when charging or operating vehicle in an enclosed space. Wear a full face shield and rubber gloves when working on or near batteries.**
- **Battery – Poison! Contains acid! Causes severe burns. Avoid contact with skin, eyes, or clothing. Antidotes:**
  - **External: Flush with water. Call a physician immediately.**
  - **Internal: Drink large quantities of milk or water. Follow with milk of magnesia or vegetable oil. Call a physician immediately.**
  - **Eyes: Flush with water for 15 minutes. Call a physician immediately.**

DANGER CONTINUED ON NEXT PAGE

Copyright © 2013

⚠ DANGER

- **Gasoline – Flammable! Explosive! Do not smoke. Keep sparks and flames away from the vehicle and service area. Service only in a well-ventilated area.**
- **Do not operate gasoline vehicle in an enclosed area without proper ventilation. The engine produces carbon monoxide, which is an odorless, deadly poison.**

⚠ WARNING

- **Follow the procedures exactly as stated in this instruction, and heed all DANGER, WARNING, and CAUTION statements in this instruction as well as those on the vehicle.**
- **Only trained technicians should service or repair the vehicle. Anyone doing even simple repairs or service should have knowledge and experience in electrical and mechanical repair. The appropriate instructions must be used when performing maintenance, service, or accessory installation.**

To avoid unintentionally starting the vehicle

- **IQ System and PowerDrive Plus vehicles (with serial number 9801 and greater): Place Tow/Run switch in the TOW position before disconnecting or connecting the batteries. Failure to heed this warning could result in a battery explosion or severe personal injury.**
- **Disconnect the batteries as shown (Figures 2 through 7, starting on page 6).**
- **PowerDrive System 48, PowerDrive Plus vehicles, and 36-volt vehicles with speed controllers: After disconnecting the batteries, discharge the controller capacitors as follows:**
  - **Turn key switch to ON and place the Forward/Reverse handle or switch in REVERSE.**
  - **Slowly depress the accelerator pedal and keep it depressed until the reverse warning buzzer can no longer be heard. When the buzzer stops sounding, the controller capacitors are discharged.**
- **Prior to servicing the vehicle or leaving the vehicle unattended, turn the key switch OFF, remove the key, place the Forward/Reverse handle in the NEUTRAL position, engage the park brake, and chock the wheels.**
- **Wear safety glasses or approved eye protection when servicing the vehicle.**
- **Do not wear loose clothing or jewelry such as rings, watches, chains, etc., when servicing the vehicle.**
- **Use insulated tools when working near batteries or electrical connections. Use extreme caution to avoid shorting of components or wiring.**

TOOLS REQUIRED

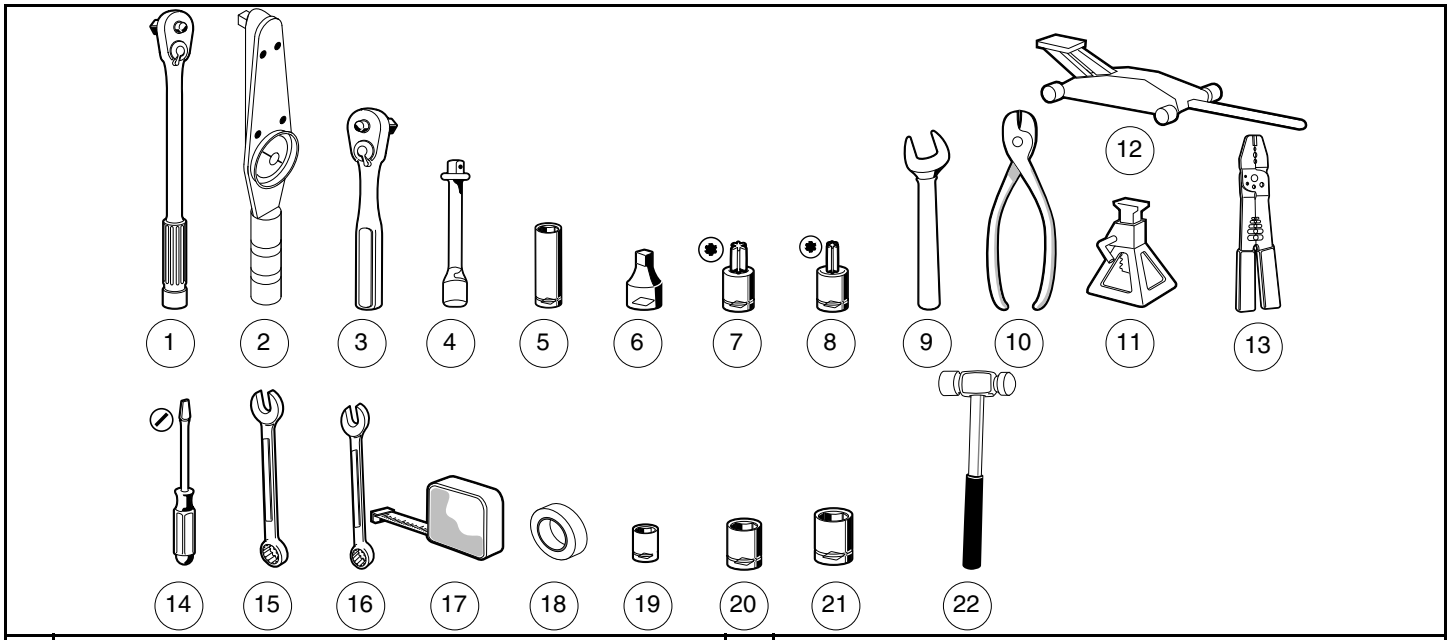

1	10-150-FT-LB Torque Wrench	12	Floor Jack
2	10-150-IN-LB Torque Wrench	13	Wire Crimper
3	1/4-IN Drive Ratchet	14	Flat Tip Screw Driver
4	6-IN Extension	15	1/2-in Wrench
5	5/16-IN Deep Well Socket, 1/4-IN Drive	16	9/16-in Wrench
6	3/8 to 1/4-IN Adapter	17	Tape measure
7	T-30 Torx Bit Driver	18	Black Vinyl Tape
8	T-20 Torx Bit Driver	19	1/4-in Socket
9	9/16-IN Insulated Wrench	20	7/16-in Socket
10	Cutting Pliers	21	1/2-in Socket
11	2 ea Jack Stands	22	Hammer

PARTS IN THIS KIT

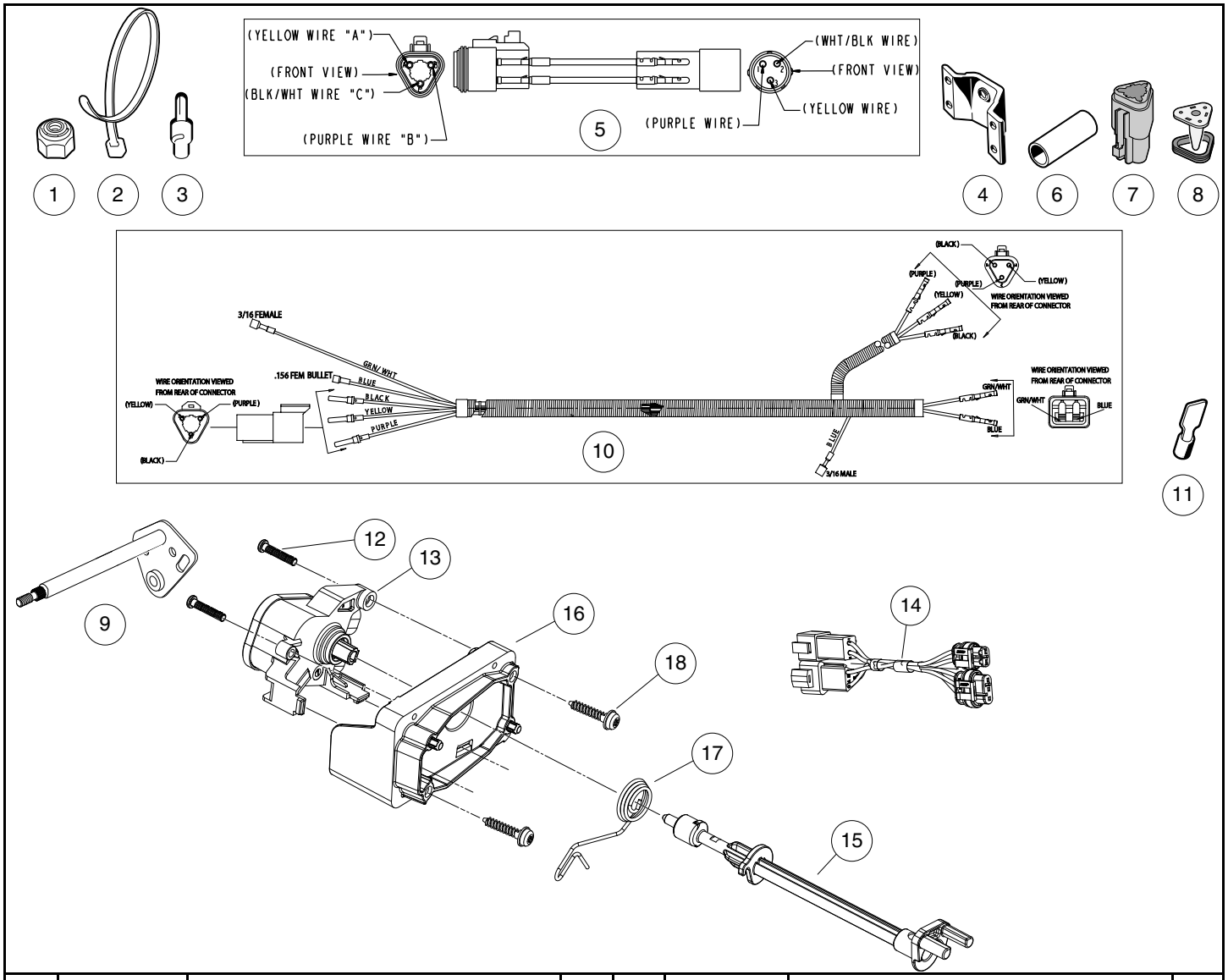

Item	P/N	Description	Qty	Item	P/N	Description	Qty
1	8754	Locknut 3/8-16 Hex	2	11	102258401	3/16-in Male Insulated Terminal	1
2	8990	Tie Wrap, 8-in Nylon	3	12	102297230	Screw, M6, Torx, Interlock Thread	2
3	1011567	.0156 Male Bullet Insulated Terminal	1	13	105116301	MCOR4 Type 16 Switch	1
4	1011694	Accelerator Bracket and Bearing Assy	1	14	103890801	Harness, Jumper MCOR	1
5	101894502	Adapter Plug Assy	1	15	103902101	Bar, Drive, Cast	1
6	101919801	Spacer, Accelerator	1	16	103902301	Housing, MCOR	1
7	101942801	Plug, 3-Pin	1	17	103902401	Spring, Torsion	1
8	101942901	Wedge Lock, 3-Pin	1	18	103943401	Screw, Pan, #10 x 1.00 HI-LO	2
9	102158901	Pivot Rod Weldment	1				
10	102193601	Wire Harness, Pigtail	1				

1. DISCONNECT THE BATTERIES

1.1. Disconnect the battery cables as instructed. **See WARNING "To avoid unintentionally starting..." on page 3**.

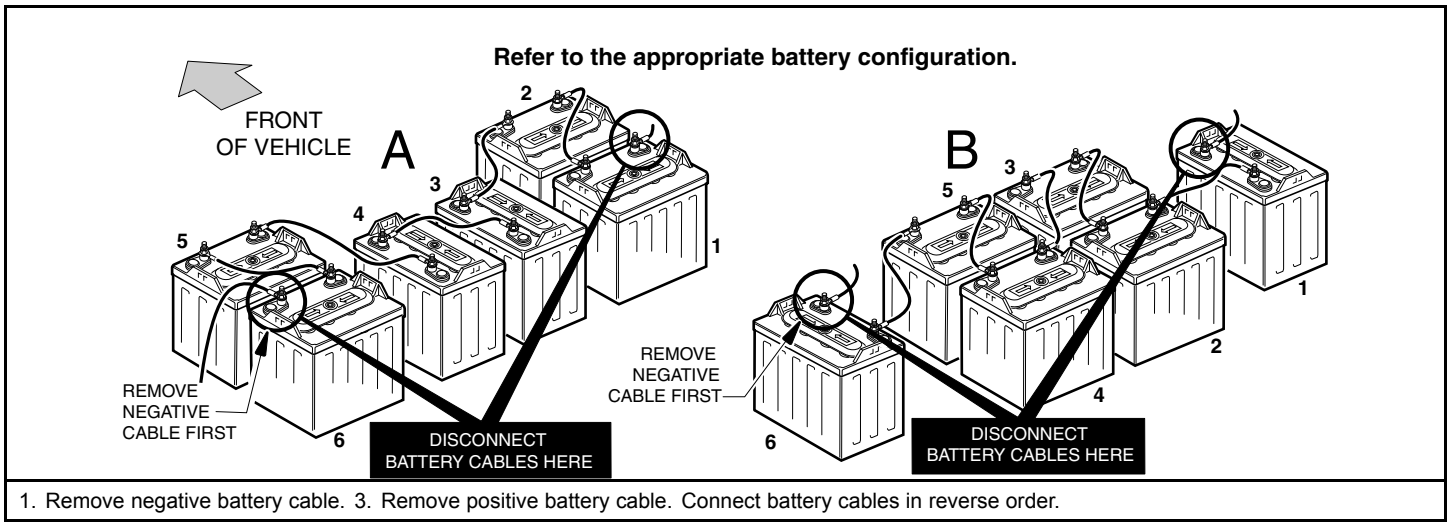

K-01453-PwrDrBatConfig.eps

Figure 2 Battery Disconnect – PowerDrive System 48 and PowerDrive Plus Vehicles

2. REMOVE ACCELERATOR PEDAL PIVOT ROD

This step pertains to a vehicle with a continuously variable potentiometer. If the vehicle has a multi-step potentiometer, proceed to Step 4.

2.1. Place chocks under the rear wheels and lift the front end of the vehicle with a chain hoist or floor jack. Place jack stands under the front cross tube of the vehicle frame and lower the vehicle onto the jack stands. **See following WARNING**.

⚠ WARNING

- **Lift only one end of a vehicle at a time. Before lifting, lock the brakes, unload the cargo bed, and chock the wheels that remain on the floor. use a suitable lifting device (chain hoist or hydraulic floor jack) with 1000 lb. (454 kg.) minimum lifting capacity. Do not use lifting device to hold vehicle in raised position. Always use approved jack stands of proper weight capacity to support vehicle.**

2.2. Remove the two hex head screws (9) attaching the potentiometer housing cover (8) to the potentiometer and remove the cover **(Figure 3)**.

2.3. Remove the bolt (13), locknut (21), and the spring retainer (14) from the pivot rod (7).

2.4. Remove the hex head cap screw (12), two flat washers (25), and lock nut (26) from the accelerator pedal and pivot rod assembly (7).

2.5. Press the brake pedal. Remove the bolt (15) and lock nut (27) from the actuator lever (6) and pivot rod assembly (7).

2.6. Remove the brake ratchet retaining nut (10) from the pivot rod assembly (7).

2.7. Press the brake pedal slightly and slide the park brake ratchet (11) toward the end of the accelerator pivot rod. Rotate the ratchet towards the rear of the vehicle and remove it from the pivot rod. **See following NOTE**.

NOTE: *Vehicles with serial numbers lower than 9704–667833 use a retaining ring and two washers to hold the actuator lever on the accelerator pivot rod. Remove the retaining ring from the accelerator pivot before step 2.8.*

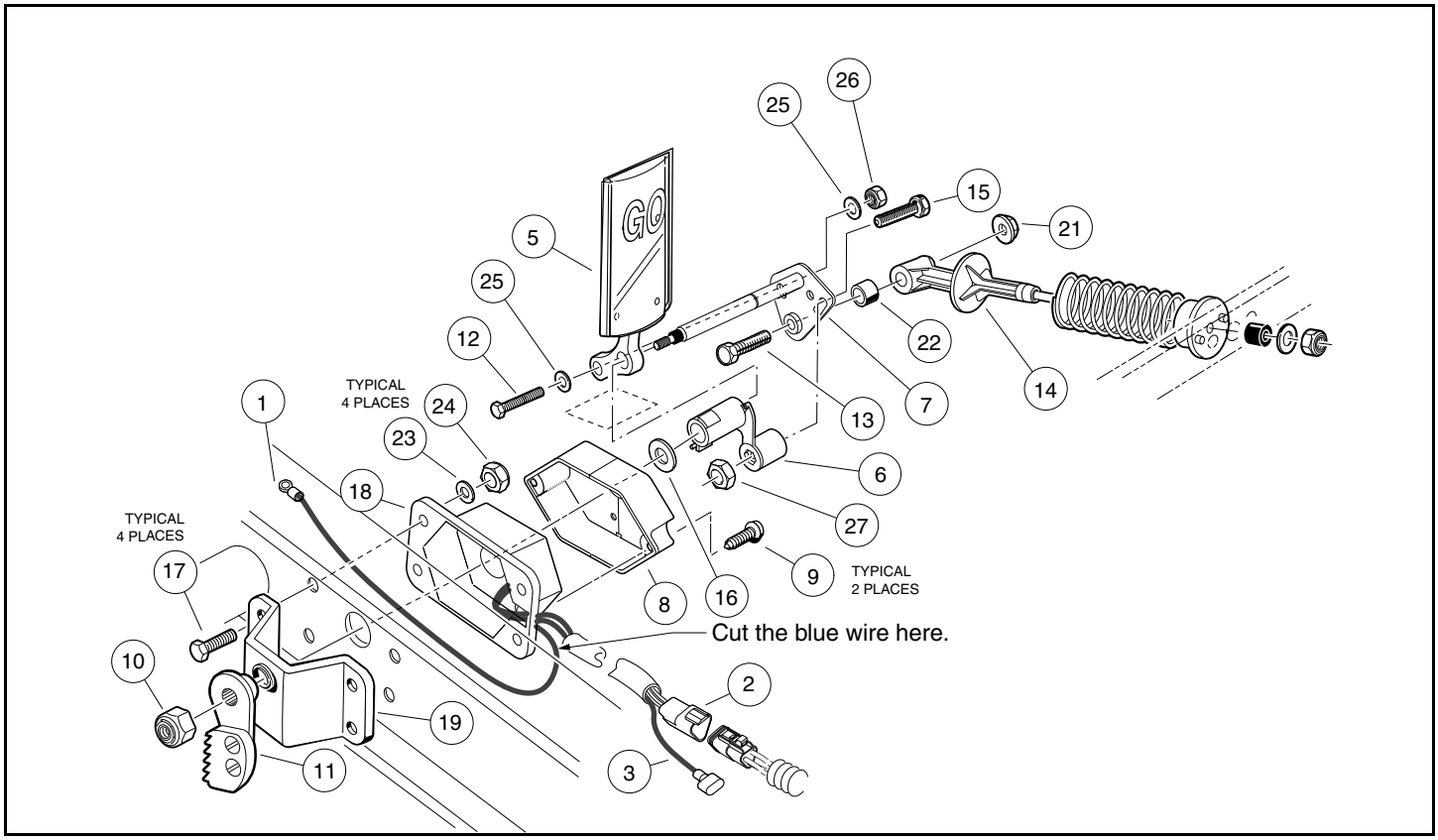

K-01444.eps

Figure 3 Remove Accelerator Pivot Rod — Vehicle with Continuously Variable Potentiometer

2.8. Remove the four 1/4 inch bolts (17), washers (23), and nuts (24) attaching the potentiometer housing (18) and the pivot rod support (19) to the frame **(Figure 3)**.

2.9. Remove the potentiometer housing and pivot rod support from the I-Beam.

3. DISCONNECT CONTINUOUSLY VARIABLE POTENTIOMETER

If equipped a continuously variable potentiometer **(Figure 3)**.

3.1. Cut the 18 gauge blue wire (1) at the potentiometer.

3.2. Unplug the three pin connector (2) that connects the potentiometer to the wire harness.

3.3. Disconnect 18 gauge green/white wire (3) at the quick disconnect terminal.

3.4. Proceed to step 6.

4. REMOVE ACCELERATOR PEDAL PIVOT ROD

This step pertains to vehicle with multi-step potentiometer. If the vehicle had a continuously variable potentiometer, proceed to step 6.

4.1. Place chocks under the rear wheels and lift the front end of the vehicle with a chain hoist or floor jack. Place jack stands under the front cross tube of the vehicle frame and lower the vehicle onto the jack stands. **See following WARNING**.

⚠ WARNING

- **Lift only one end of a vehicle at a time. Before lifting, lock the brakes, unload the cargo bed, and chock the wheels that remain on the floor. use a suitable lifting device (chain hoist or hydraulic floor jack) with 1000 lb. (454 kg.) minimum lifting capacity. Do not use lifting device to hold vehicle in raised position. Always use approved jack stands of proper weight capacity to support vehicle.**

4.2. Remove the nut (23), two washers (25), and bolt (4) securing the accelerator pedal (1) to the pivot rod (6) **(Figure 4)**.

4.3. Disconnect the accelerator rod assembly (17, 18, and 19) at the front and rear ball studs and remove it from the vehicle.

4.4. Remove the nut (10) and ball stud (16) from the accelerator pivot rod assembly (6).

4.5. Slide the spring retainer (11) off of the accelerator pivot rod.

4.6. Remove the lock nut (26) from the accelerator pivot shaft.

4.7. Depress the brake pedal slightly and then slide the park brake ratchet (24) toward the end of the accelerator pivot rod. Rotate the ratchet and remove it from the pivot rod.

4.8. Pull accelerator pedal (1) out of vehicle from the top side of the floorboard.

5. REMOVE MULTI-STEP POTENTIOMETER

If equipped with a multi-step potentiometer.

5.1. **Vehicle with battery configuration A (Figure 2, Page 6)**: Remove the hold-down bracket from the Number 5 and Number 6 batteries. Remove batteries from the vehicle.

5.2. Disconnect from the wire harness the three-pin connector (2), blue wire (3) and the green/white wire (4) from multi-step potentiometer **(Figure 5)**. **See following NOTE**.

NOTE: *Vehicles with serial numbers 9901 through 0001 may have a six-pin connector.*

5.3. Remove the nuts (6) and lock washers (7) from underneath the I-Beam flange and lift the multi-step potentiometer assembly (10) from the frame. Remove the shim plate (8) **(Figure 5)**.

5.4. **Vehicles with battery configuration A (Figure 2, Page 6)**: Check and clean the battery rack and hold-downs. The nuts and bolts on the hold-downs may corrode. It is therefore advised they be cleaned periodically and replaced as necessary. Install number 5 and number 6 batteries in the proper orientation **(Figure 2, Page 6)**. Install battery hold-downs. The hold-downs should be tight enough so batteries do not move while vehicle is in motion, but not so tight as to crack or buckle battery case. Tighten to 40 in-lb (4.5 N·m), alternating between hold-down bolts. Reconnect battery cables, leaving the number 6 negative (–) post disconnected. Tighten terminals to 110 in-lb (12.4 N·m).

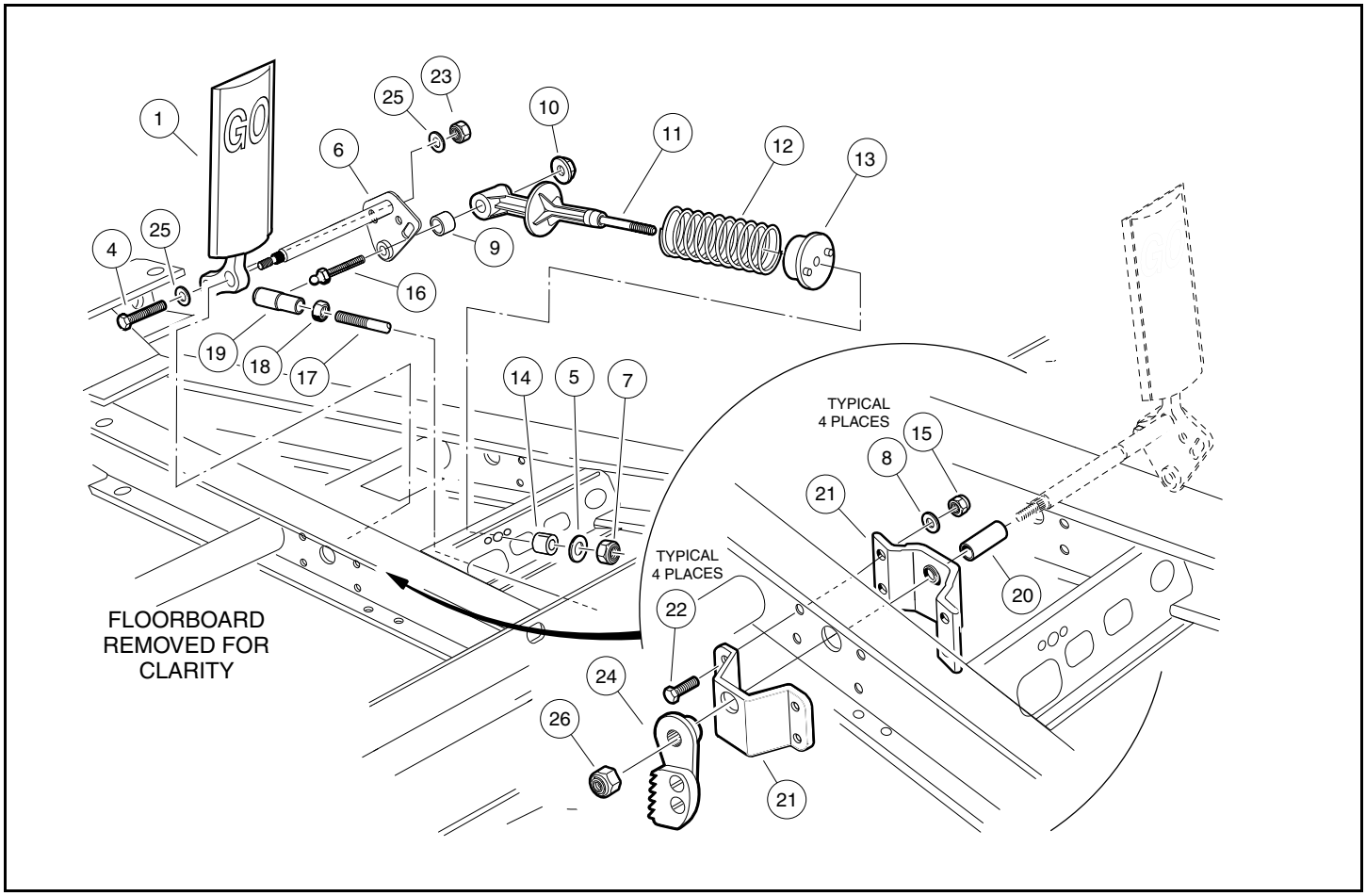

K-01445.eps

Figure 4 Remove Accelerator Pivot Rod – Vehicle with Multi-step Potentiometer

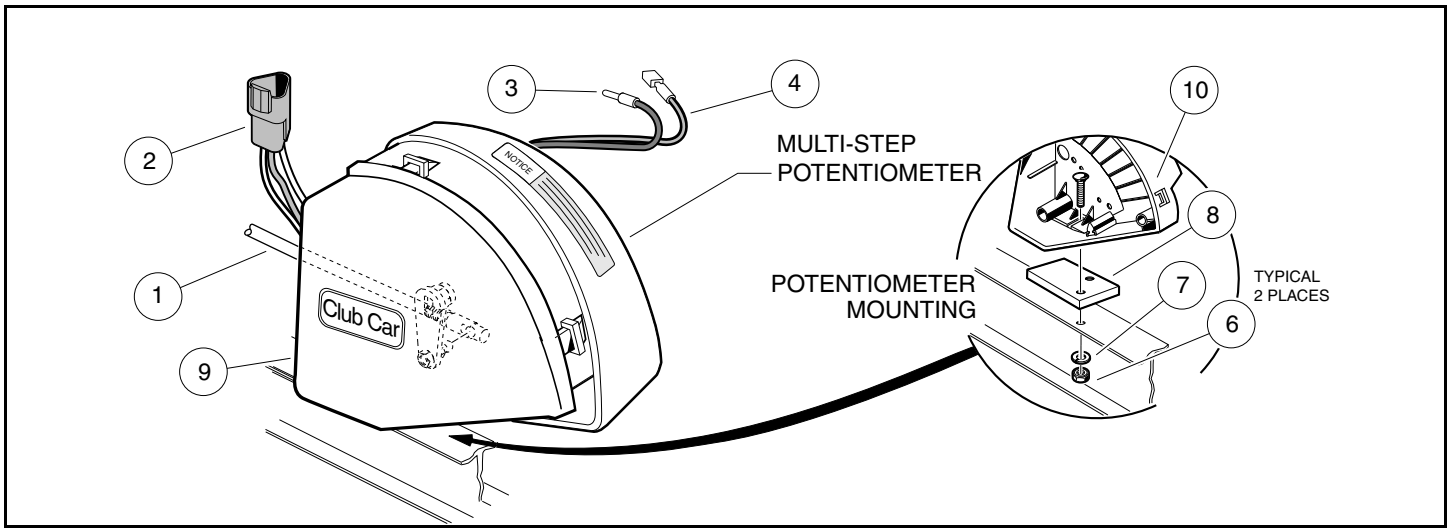

K-01446.eps

Figure 5 Remove Multi-step Potentiometer

6. REMOVE VOLTAGE LIMITER

This step pertains to vehicle with a wheelbase 98.5 inches (250.2 cm) or longer with a voltage limiter. If the vehicle either A) has a wheelbase shorter than 98.5 inches (250.2 cm), or B) does not have headlights, proceed to step 8.

6.1. Voltage limiter must be removed from the original location to allow clearance for MCOR mounting and MCOR wire harness. Remove the nuts (3) from the opposite side of the I-beam. Remove the limiter from the I-beam **(Figure 6)**. **See following CAUTION**.

⚠ CAUTION

- **Never use a metal object such as a screwdriver to pry the voltage limiter away from the I-beam. Failure to heed this caution may result in damage to the voltage limiter.**

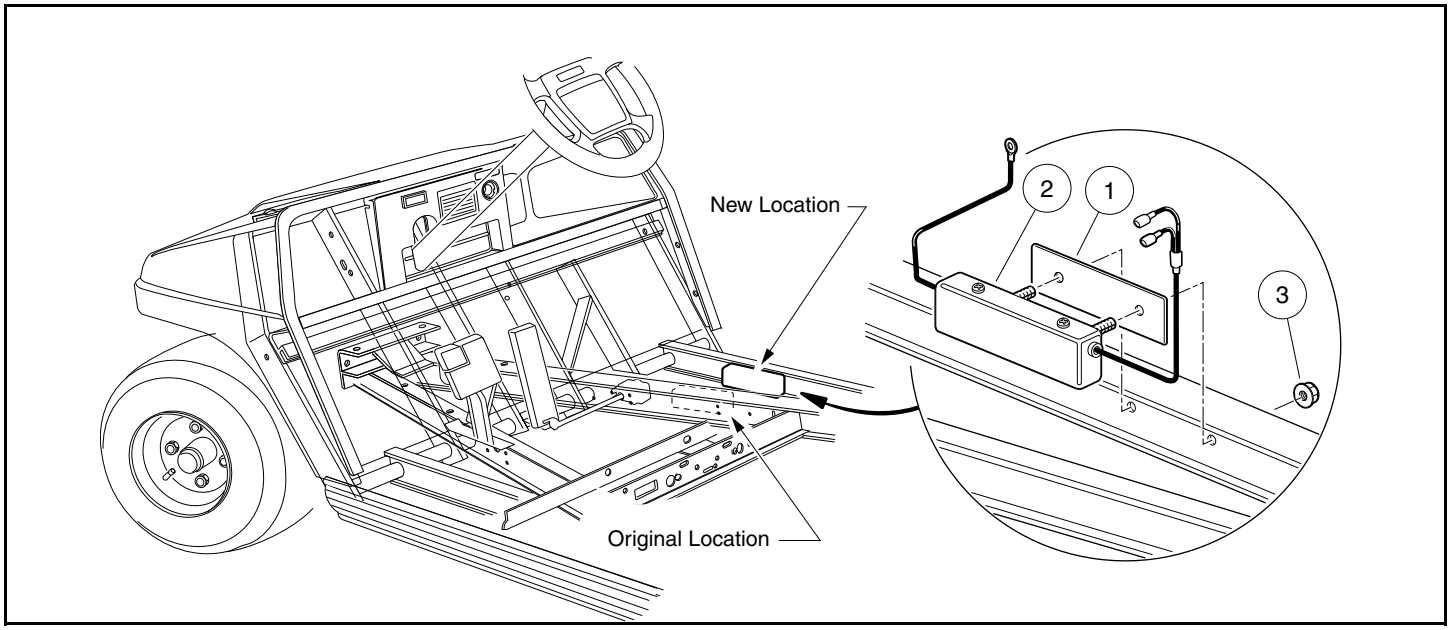

K-01447.eps

Figure 6 Voltage Limiter Installation

7. MOUNT VOLTAGE LIMITER

This step pertains to vehicle with a wheelbase 98.5 inches (250.2 cm) and longer with a voltage limiter.

7.1. Locate the pre-drilled mounting holes in the I-beam that is parallel with the centerline of the vehicle and is located under the front, passenger-side floorboard **(Figure 6)**. If vehicle does not have pre-drilled mounting holes, drill holes as follows:

7.1.1. Using the voltage limiter mounting studs as a template, mark and drill two 5/16 inch diameter holes through the I-beam. Locate the first hole approximately 8 inches (20.3 cm) from the front end of the I-beam.

7.1.2. Remove all burrs from holes.

7.2. Place the gasket (1) on the voltage limiter as shown.

7.3. Mount the voltage limiter (2) on the inboard side of the I-beam, using two flanged lock nuts (3). Tighten lock nuts to 50 in-lb (5.6 N·m).

8. INSTALL ACCELERATOR PEDAL PIVOT ROD

8.1. Install pivot-rod support.

8.1.1. **Continuously variable potentiometer vehicles**: Mount new pivot-rod support (21) on frame with existing pivot rod support as shown **(Figure 4, Page 9)**. Install and finger tighten hardware removed earlier.

8.1.2. **Vehicles with a multi-step potentiometers**: Both pivot rod supports are existing in the vehicle. Proceed to step 8.2.

8.2. Insert the lower end of the accelerator pedal (1) through the floorboard and install the new accelerator pivot rod (6) through the uppermost hole in the pedal **(Figure 8, Page 13)**.

8.3. Install plastic spacer (20) on new pivot rod (6).

8.4. Insert new pivot rod through pivot rod supports (21) on vehicle frame.

8.5. Insert the bolt (4), with washer (5), through the lower hole in the pedal and through the pivot rod. Secure with washer (5) and new locknut (7). **See following NOTE**. Finger tighten locknut at this time.

NOTE: *Vehicles with serial numbers lower than 9801 use the 5/16 nylon lock nut that was removed earlier.*

8.6. Tighten the four bolts (22) attaching the pivot rod supports (21) to frame to 75 in-lb (8.5 N·m).

8.7. Install ball stud (16) (on multi-step potentiometer vehicles, **(Figure 4, Page 9)** or bolt (16) (on continuously variable potentiometer vehicles, **(Figure 3, Page 7)** through the pivot rod and through the spring retainer (11). Secure with nut (10) and tighten to 50 in-lb (5.5 N·m). **See following NOTE**.

NOTE: *The head of the bolt or the ball of the ball stud should be oriented toward the driver side of vehicle.*

8.8. Press the brake pedal slightly, and with the park brake ratchet oriented so that the tip of the ratchet is pointed toward the rear of the vehicle, slide the ratchet onto the pivot rod (do not slide the ratchet onto the pivot rod splines). Release the brake pedal and allow the ratchet to rotate until its tip is pointed downward **(Figure 7)**. The ratchet should now rotate freely on the rod.

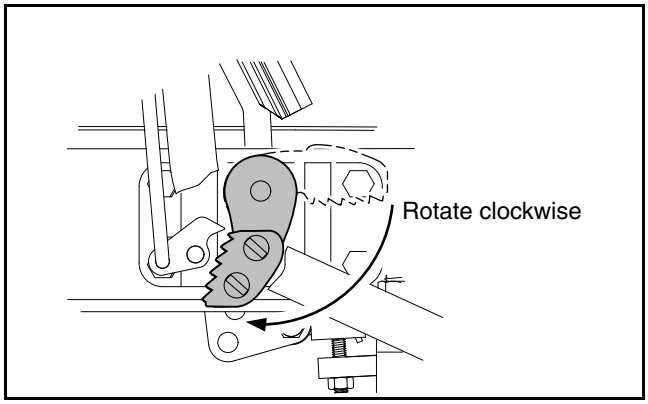

K-01448.eps

Figure 7 Ratchet Installation

8.9. Rotate ratchet clockwise until it touches the park brake pawl. Slide the ratchet onto the splines of the pivot rod (it may be necessary to push the pivot rod toward the driver side of the vehicle to make the splines accessible). The ratchet may have to be rotated counterclockwise slightly to align splines.

8.10. Install the new 7/16 locknut (23) on pivot rod. Tighten to 18 ft-lb (24.5 N·m).

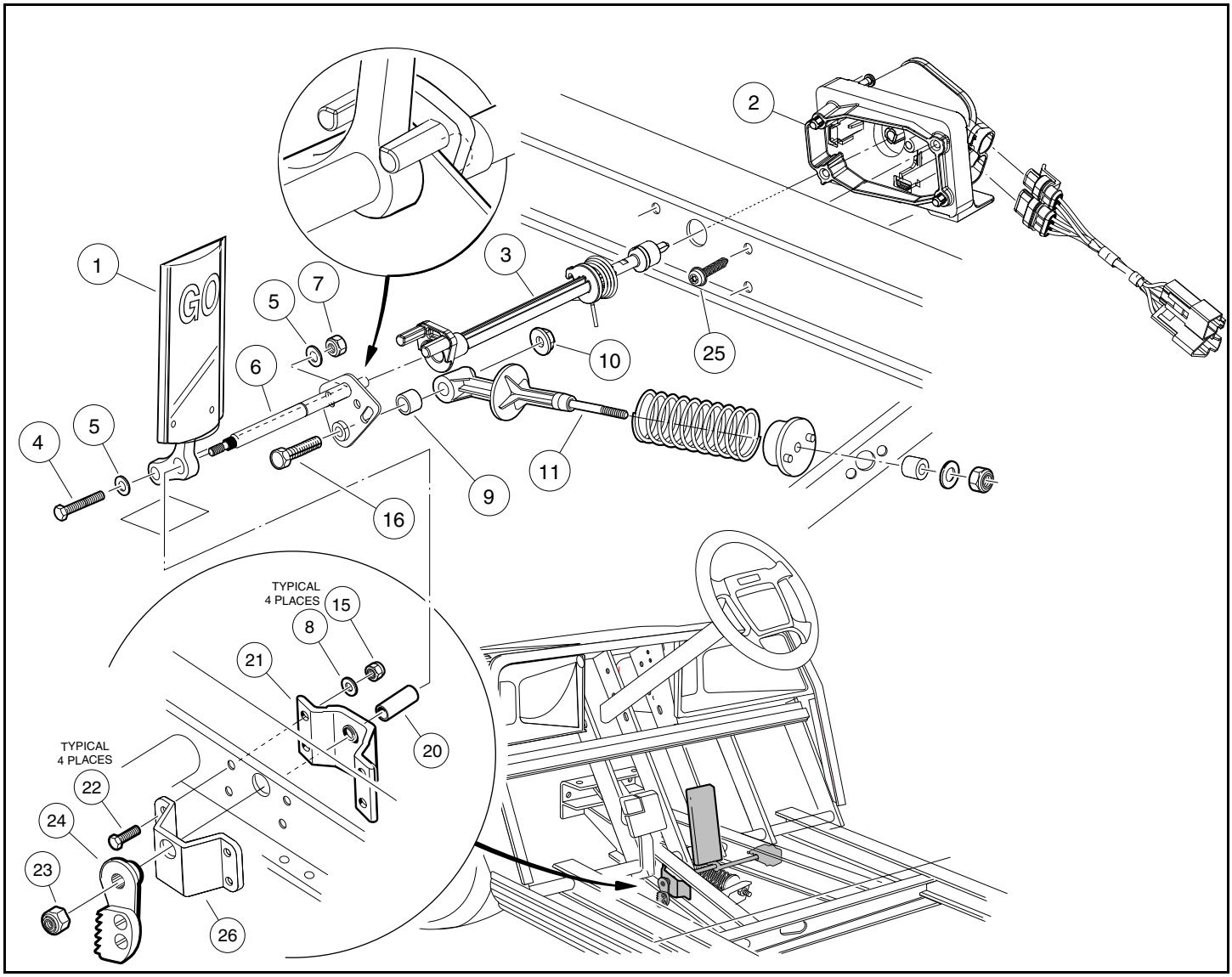

K-01460.eps

Figure 8 Accelerator Pedal with MCOR4

9. INSTALL MCOR4

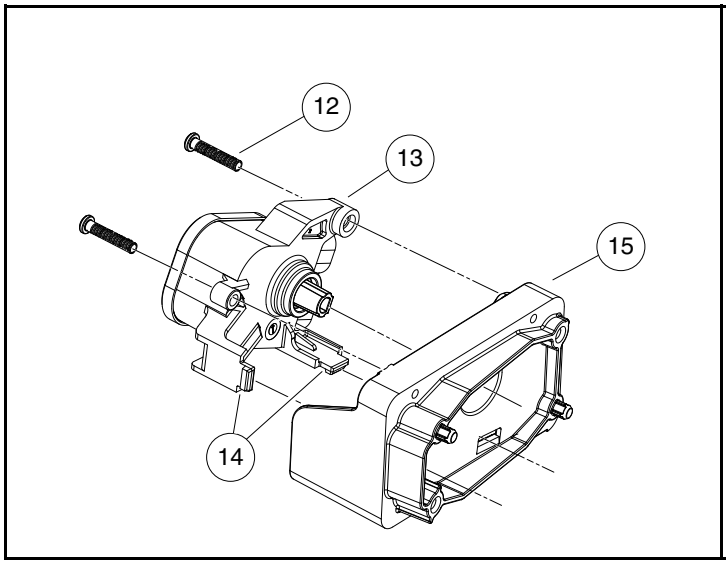

K-01440.eps

Figure 9 Secure MCOR4 to Housing

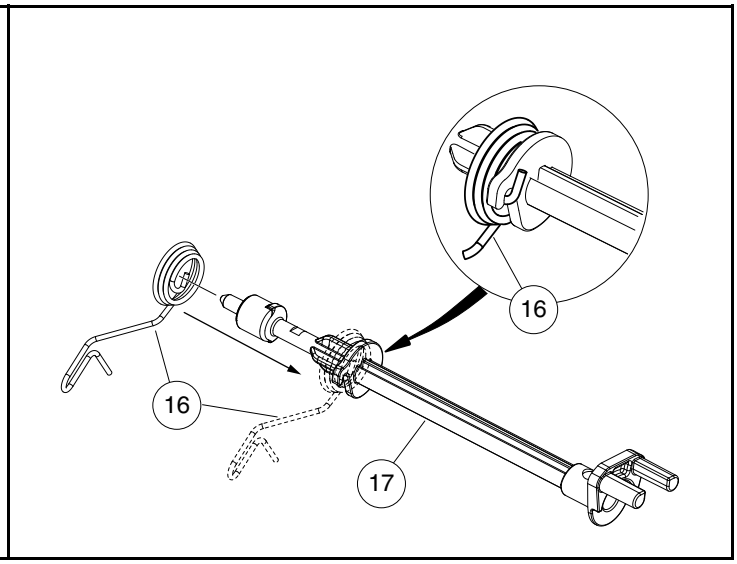

K-01439.EPS

Figure 10 Position Auxiliary Spring to Drive Bar

9.1. Assemble the MCOR4 (13) to the MCOR housing (15), by inserting the two tabs (14) of the MCOR4 into the corresponding slots in the housing, and secure with two #10 x 1.00 hi-lo screws (12) **(Figure 9)**. Tighten to 1.1 to 1.7 N·m.

9.2. Place the torsion spring (16) onto the short end of the new drive bar (17) **(Figure 10)**. Make sure the “hook” on the spring captures the notch on the drive bar.

9.3. To install the drive bar (17) to the accelerator pedal, insert the end (closest to spring) of the drive bar into the hole of the inboard side of the passenger frame, and then slide the drive bar so the pins of the drive bar capture the base of the accelerator pedal (19) **(Figure 11)**.

9.4. Align the center of the “D” shaped hub (20) of the new MCOR4 assembly (15) to the end of the new drive bar (17) and align the two locator pins (21) to the outboard side of the frame. Insert the new drive bar into the hub. (The MCOR4 is keyed to ensure the correct positioning of the drive bar).

9.5. Secure the MCOR4 assembly (15) to the frame starting with the rear M6 torx screw (23) first. Tighten the screw to 22-31 in-lb (2.5-3.5 N·m).

9.6. At the torsion spring (16), make sure the hook end of the spring is captured to the drive bar, then position the spring so the “dog leg” (24) of the spring rests on the interior surface of the I-beam. Align the loop of the spring to the forward hole of the MCOR4 and secure with one M6 torx screw (25) through the loop in the spring. If spring does not align with the mounting hole, slide the drive bar (17) left or right until aligned. Tighten the screw to 22-31 in-lb (2.5-3.5 N·m).

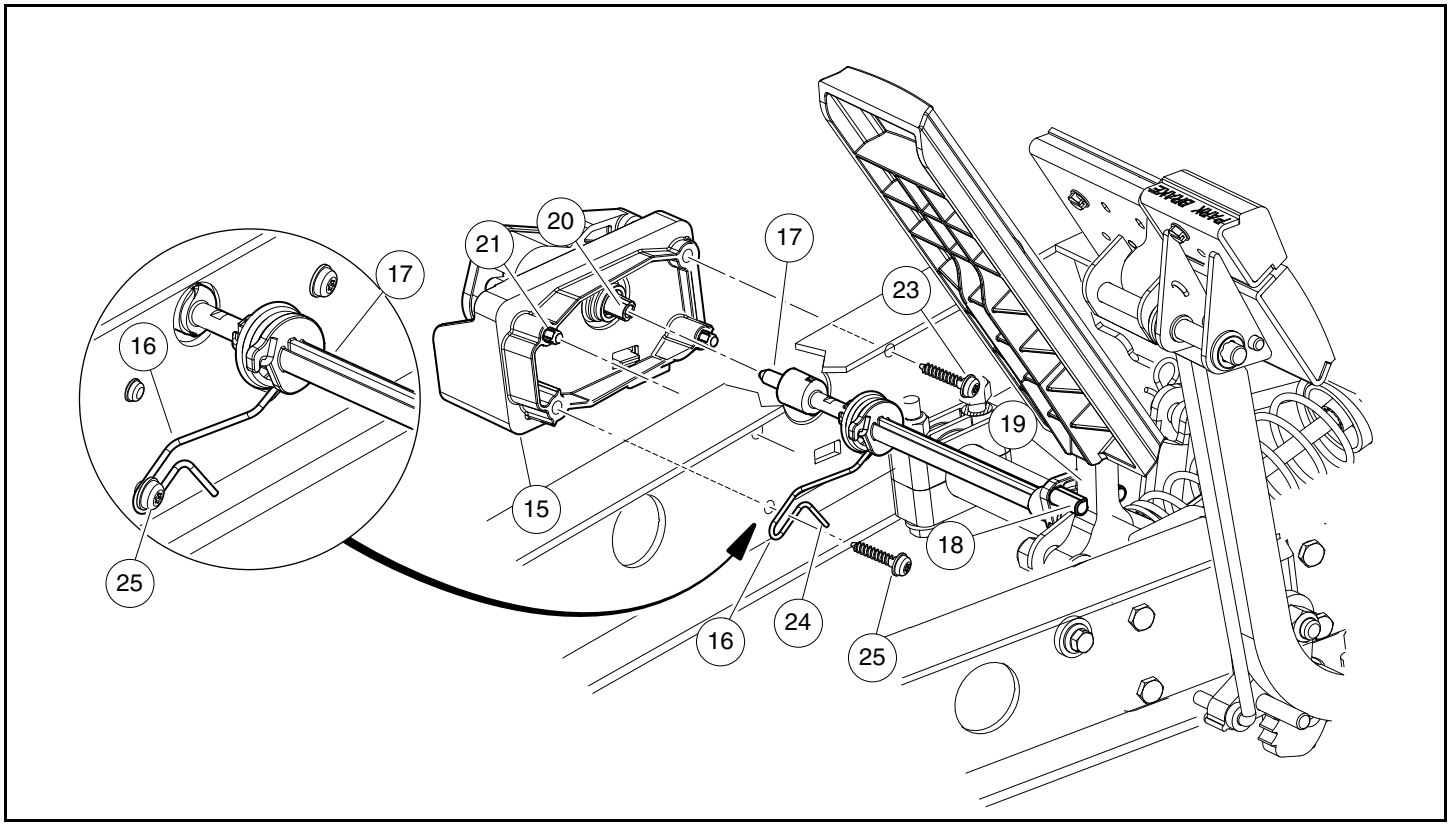

K-01424.eps

Figure 11 Position Drive Bar and MCOR4 to Pedal and Frame

10. ADJUST THE PEDAL GROUP

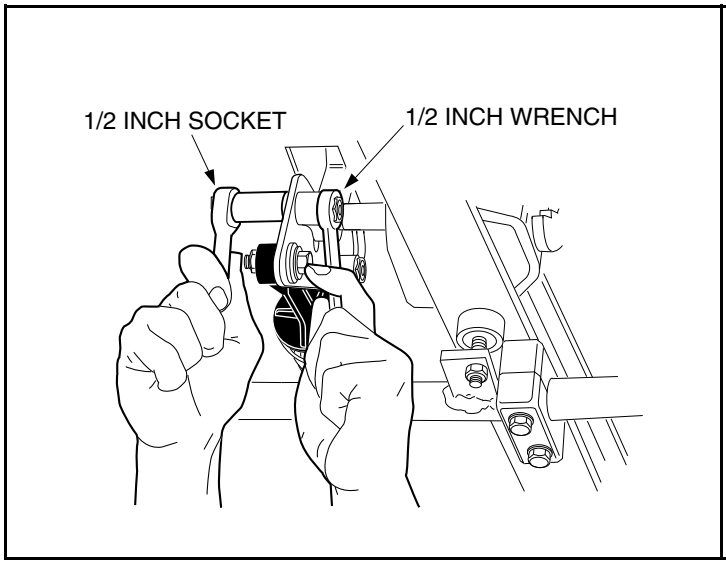

K-01449.eps
Figure 12 Accelerator Pedal Height Adjustment

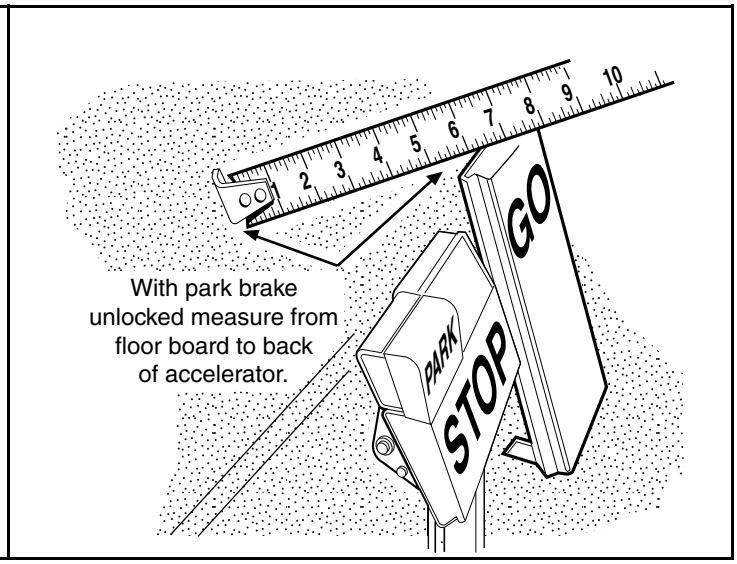

K-01450.EPS
Figure 13 Accelerator Pedal Height Measurement

10.1. Loosen the nut and bolt securing the accelerator pedal to the pivot plate **(Figure 12)**.

10.2. Depress the accelerator pedal until the distance from the top of the accelerator pedal to the floorboard is 5-7/8 inches (15 cm) **(Figure 12)**. Tighten hardware to 26 ft-lb (35.3 N·m) **(Figure 13)**.

10.3. Adjust the brake pedal — See Brake Pedal Group in the appropriate maintenance and service manual.

11. MODIFY 18 GAUGE BLUE WIRE

This step pertains to continuously variable potentiometer vehicles only.

11.1. Strip the blue wire insulation back 1/4 inch (6 mm) from the end of the wire that was disconnected from the potentiometer. Crimp a female quick-disconnect terminal onto the blue wire. Proceed to step 13.

12. REPLACE SIX-PIN CONNECTOR WITH THREE-PIN CONNECTOR

This step pertains to multi-step potentiometer vehicles with a six-pin connector. If your vehicle was not equipped with a six-pin connector, proceed to step 13.

12.1. Using a 1/8 inch tip flat blade screwdriver, remove the rubber gasket (1) from the 6-pin plug housing **(Figure 14)**. **See following NOTE**.

NOTE: *If required, cut the wire tie that secures the wire harness with six-pin connector to the frame.*

12.2. Place the flat blade of the screwdriver between the wedge lock (3) and the plug housing (2) at the recessed area (4) and pry wedge lock from 6-pin plug housing.

12.3. Insert screwdriver into terminal under the clip (5) and gently raise the clip and pull terminal socket (6) from the 6-pin housing.

12.4. Install the wire from the existing wire harness into the new three-pin connector supplied in this kit as follows: purple wire into B position, yellow wire into A position, and white/black wire into the C position.

12.5. Make sure orange wedge lock is positioned correctly, with arrow (7) on wedge lock pointing toward housing clip (8).

12.6. Install rubber gasket (1).

12.7. Cut the terminal pins off the green/white and blue wires in the vehicles wire harness. Strip the wire insulation back 1/4 inch (6 mm) from the end of the both wires.

12.8. Crimp the 3/16 male spade terminal onto the green/white wire. Crimp the male bullet terminal onto the blue wire.

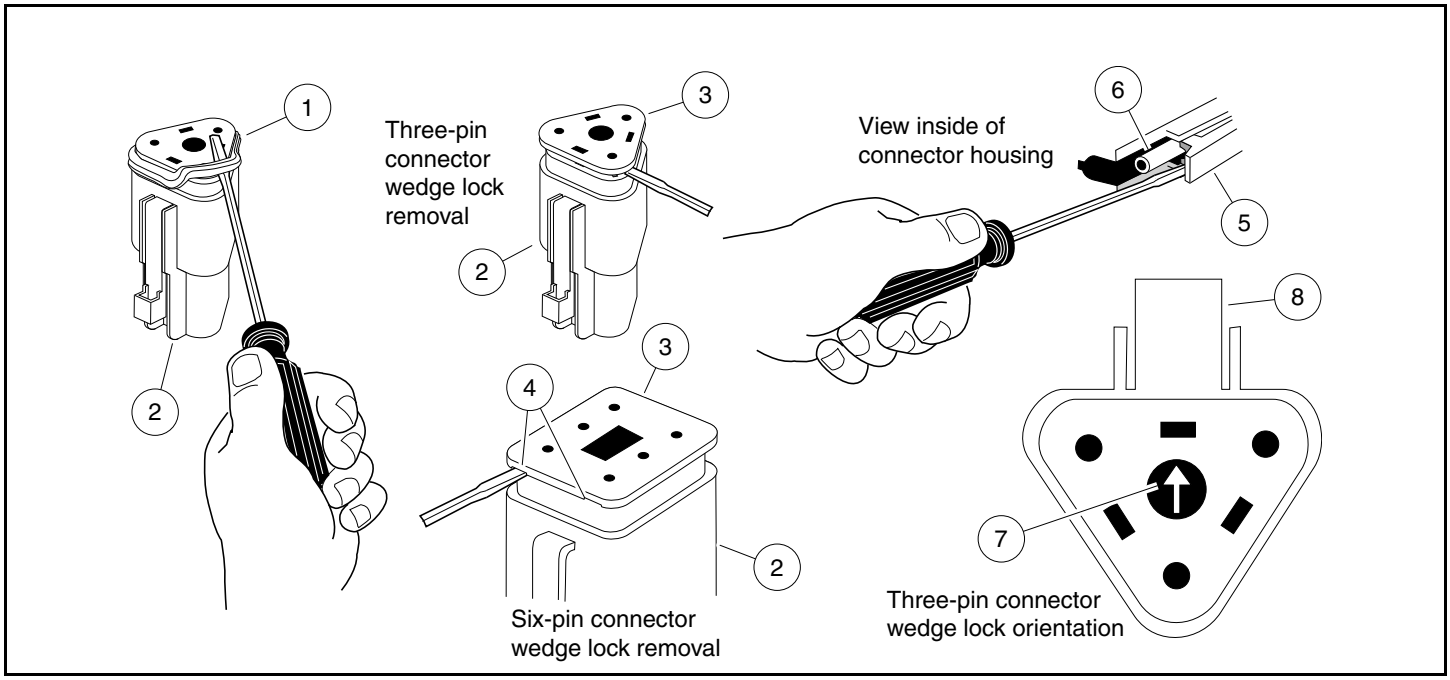

K-01451.eps

Figure 14 Terminal Plug Housing

13. MODIFY FRAME FOR WIRE HARNESS ACCESS

This step pertains to vehicles with a wheelbase 98.5 inches (250.2 cm) and longer. If the vehicle has a wheelbase shorter than 98.5 inches (250.2 cm), proceed to step 14.

13.1. Bend the tab as shown to provide a passageway for the wire harness **(Figure 15)**.

13.2. Route the new wire harness through the hole in the frame up to the three-pin connector location.

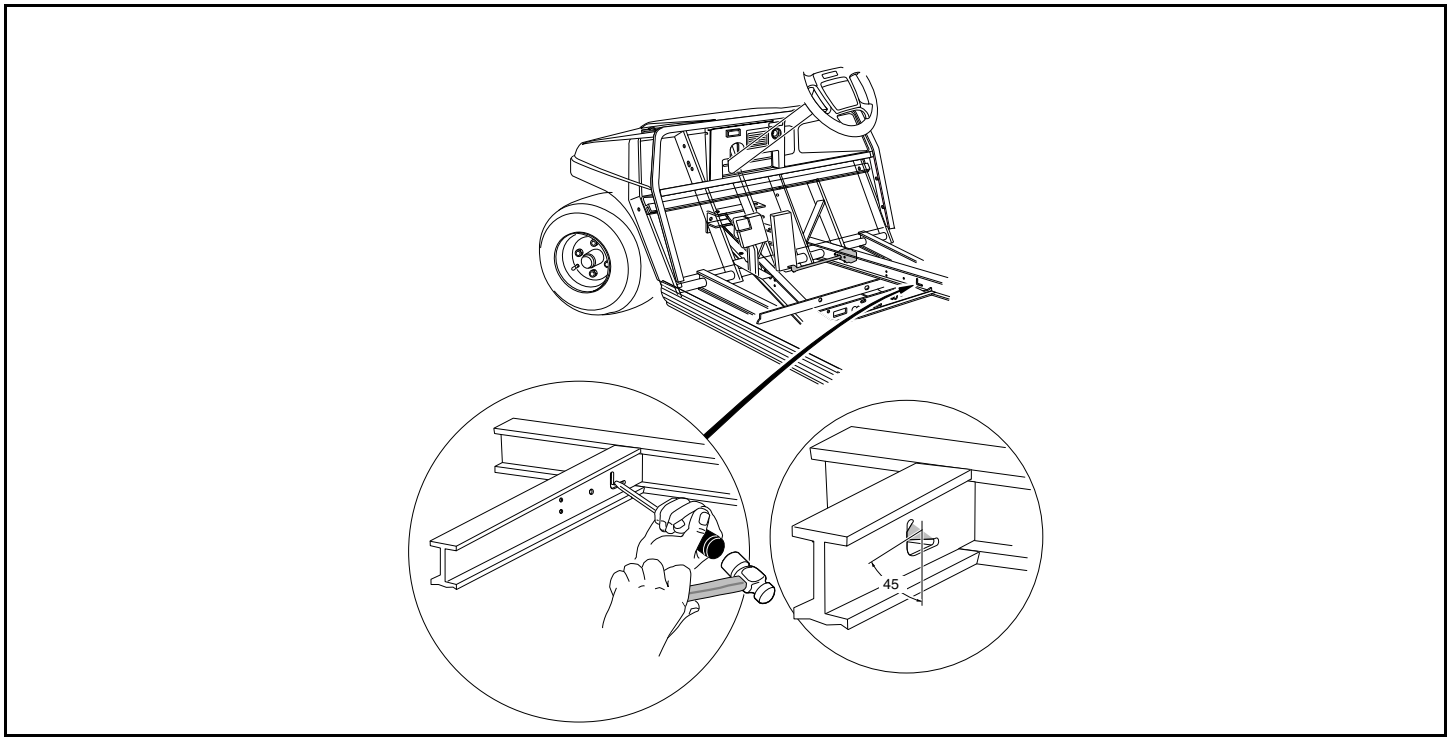

K-01452.eps

Figure 15 Wire Harness Access Hole

14. CONNECT WIRING TO MCOR4

14.1. Connect the 18 gauge blue wire from the new wire harness to the 18 gauge blue wire in the vehicle wire harness **(Figure 16)**. **See following NOTE**.

NOTE: *Vehicles originally configured with continuously variable potentiometer: Route the 18 gauge blue wire to the outside of the I-beam that the MCOR is mounted to before connecting it to the wire harness.*

Tape the unused end of the #18 gauge blue wire and insert the wire into the harness.

14.2. Connect the three-pin connector from new wire harness to the connector in the vehicle wire harness. **See following NOTE**.

NOTE: *If the vehicle has a serial number lower than 9529, the vehicle wire harness will have a round black three-pin connector; use the wire adapter (5) and wire harness pigtail (10) to connect the new harness (26) and to the vehicle wire harness (27).*

14.3. Connect the 18 gauge green/white wire to the new wire harness.

14.4. Match connect the MCOR adapter harness (26) between the vehicle harness (27) and new MCOR4 (13) **(Figure 16)**.

14.5. Tie wrap (28) the adapter harness to the vehicle harness.

14.6. With the floor jack, lift the vehicle to remove the two jack stands, and lower the vehicle to the ground.

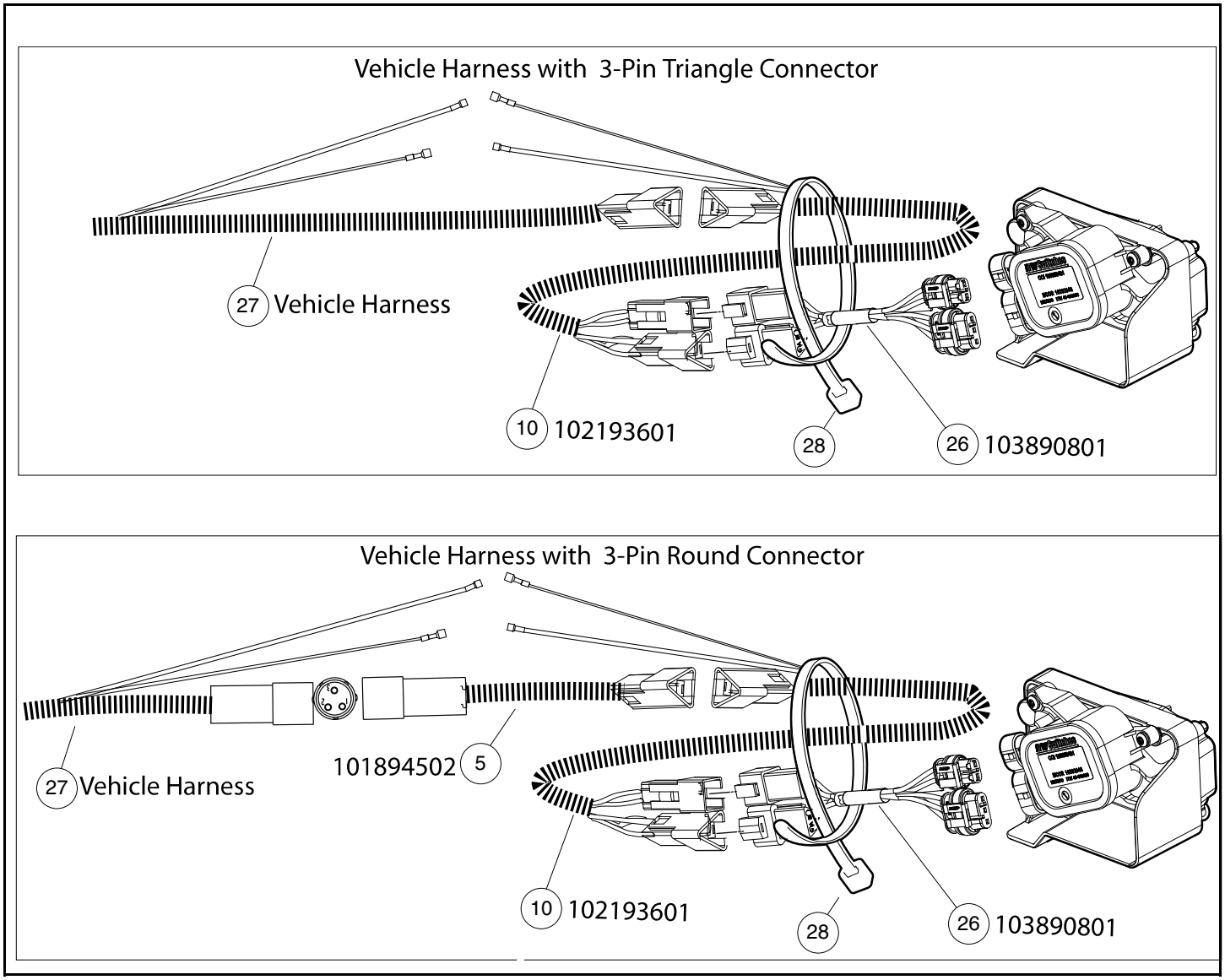

K-01453.eps

Figure 16 Connect Wire Harness

15. CONNECT BATTERY CABLES

⚠ WARNING

- **Place Tow/Run switch in the TOW position before disconnecting or connecting the batteries. Failure to heed this warning could result in a battery explosion or severe personal injury.**

15.1. Connect the battery cables, positive (+) cable first. For electric vehicles, tighten hardware to 110 in-lb (12.4 N·m) **(Figure 2 through Figure 7, page 6)**. Coat terminals with Battery Terminal Protector Spray (CC P/N 1014305) to minimize corrosion.

16. TEST DRIVE VEHICLE

16.1. Test drive the vehicle to ensure proper operation.

QUESTIONS

Questions or comments regarding these kit instructions should be referred to your local dealer or distributor. Please know your vehicle model and have these kit instructions available when you call.

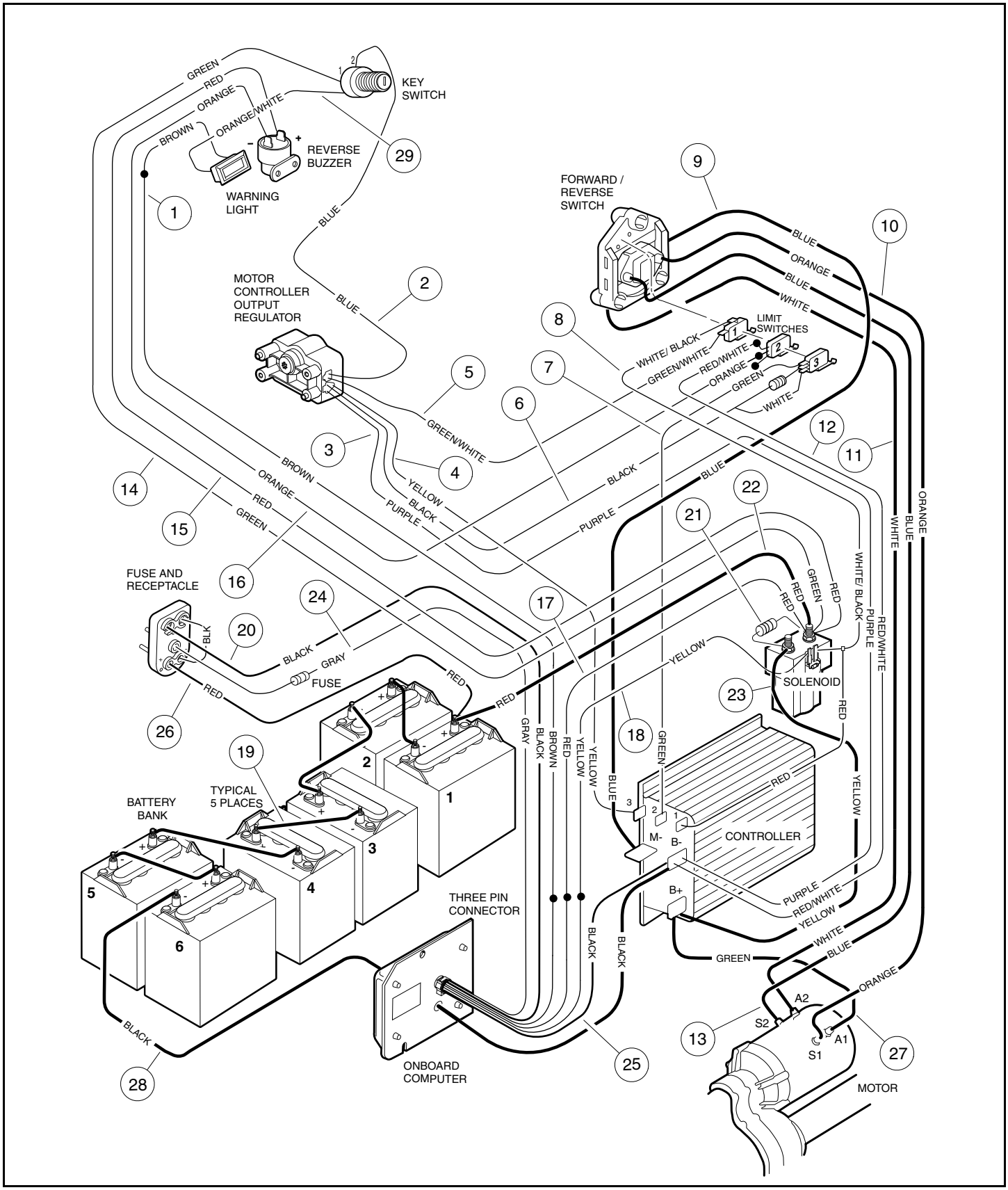

K-01454.eps

Figure 17 Wiring Diagram– All PowerDrive System 48 Vehicles (Except Carryall2, Carryall6, Transporter, Villager 6, and Villager 8)

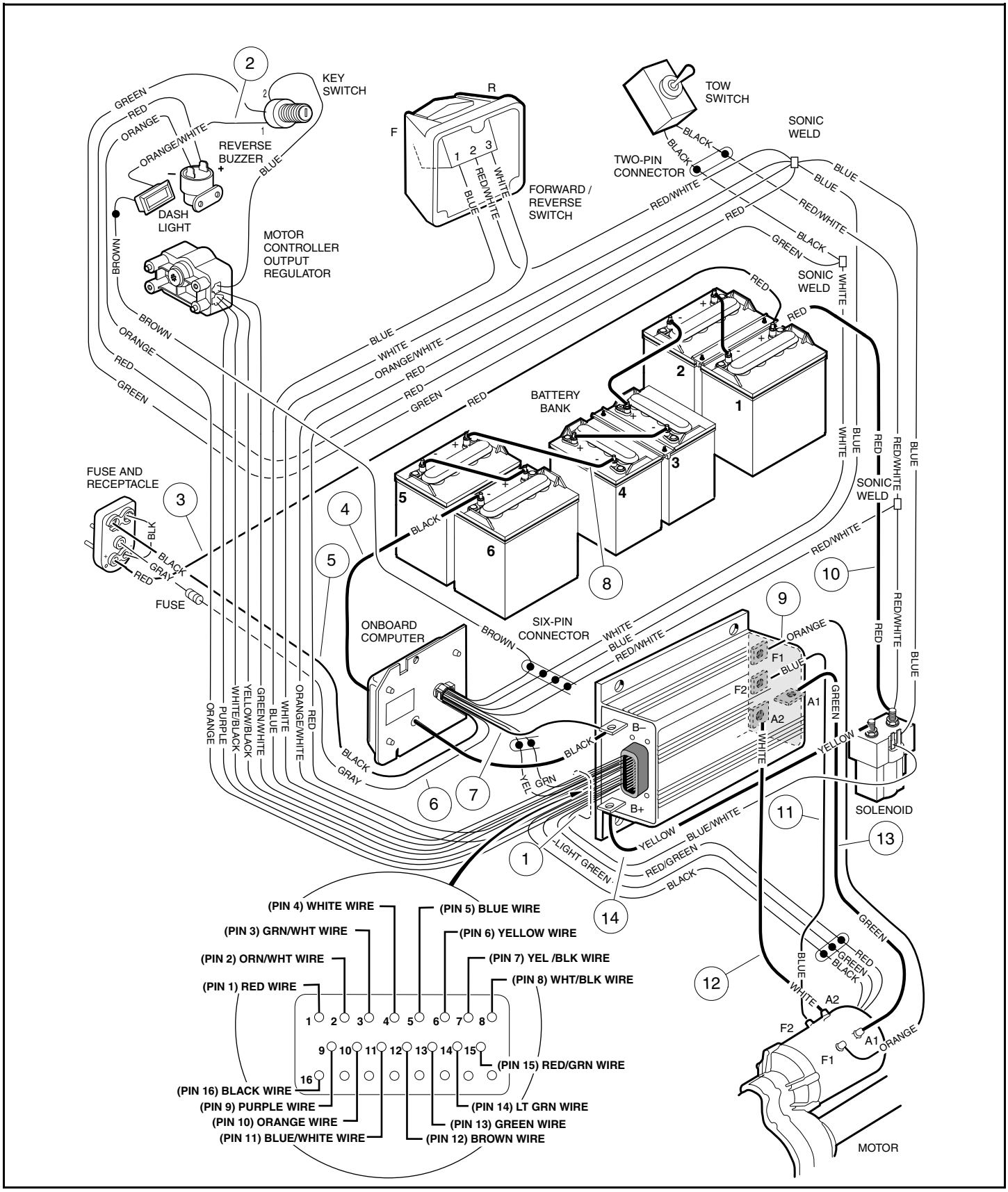

K-01456.eps

Figure 18 Wiring Diagram– DS PowerDrive Plus Vehicles.

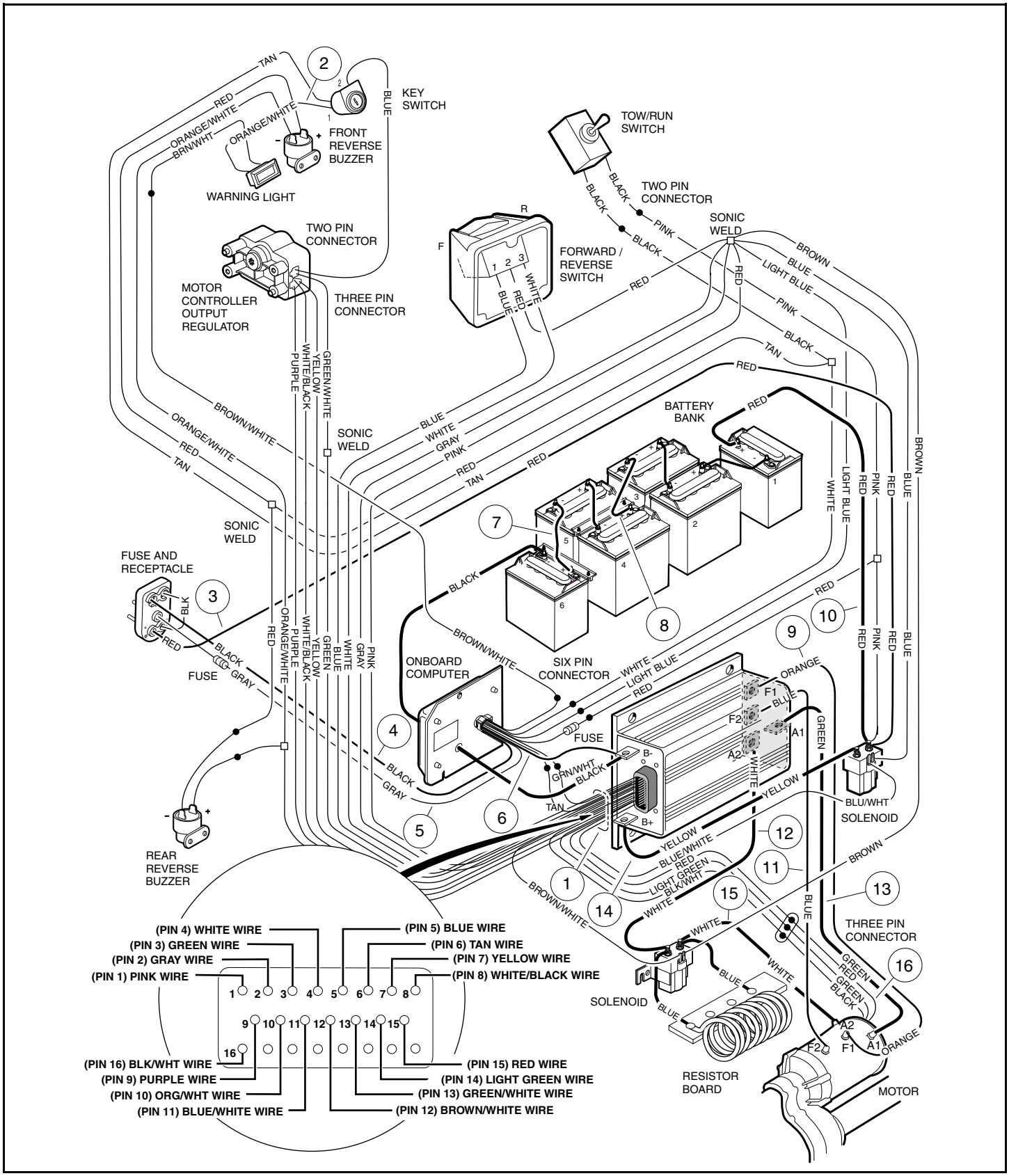

K-01457.eps

Figure 19 Wiring Diagram– Limo Vehicles with Heavy-Duty PowerDrive Plus