***Front Instructions only, rear lift kit is sold separately and will include its own installation instructions. ***

MADJAX®

Part # 16-055 (FRONT)

MadJax King XD Lift Kit

(fits Yamaha Drive and Drive2)

SCAN CODE TO WATCH INSTALLATION VIDEO

WARNING:

After installing this lift kit, the front wheels must be properly aligned. Failure to properly align the front wheels may result in decreased ability to control the Golf Cart which may result in a rollover or crash.

WARNING

- To reduce risk of accidents and injury or death -

Be Prepared

- Wear seatbelt, motorcycle helmet, eye protection, and protective gear.

- Keep your body completely inside the vehicle at all times. Keep both hands on the steering wheel. Be sure passenger is seated, belted, and holding onto the handholds.

Be Qualified and Responsible

- This vehicle is intended for use only by an operator 16 years or older with a valid motor vehicle license.

- Passenger and driver must be able to place both feet flat on the floorboard while seated upright with their backs against the seat backs.

Avoid Rollovers and Crushing Injuries

- Use care when turning:
  - -Turning the steering wheel too far or too fast can result in a rollover or loss of control.
  - -Slow down before entering a turn.
  - -When making tight turns from a stop, or at slow speeds, avoid sudden or hard acceleration.
  - -Avoid sideways sliding, skidding, or fishtailing, and never do donuts.

- Drive straight up and down inclines, not across them, if crossing a hill is unavoidable, drive slowly and turn downhill immediately if you feel the vehicle may tip.

Abrupt maneuvers or aggressive driving have caused rollovers - even on flat, open areas.

MUST BE 16 or Older

WARNING:

Professional installation is recommended for this lift kit and must be performed while following these instructions.

*** After installing this lift kit, the front wheels must be properly aligned. Failure to properly align the front wheels may result in decreased ability to control the Golf Cart which may result in a rollover or crash.**

*** The yellow Warning Label included with these instructions must be placed in a visible location to the operator of this vehicle.**

*** This MadJax lift kit is not intended for use on carts other than Yamaha G29 or Drive2.**

*** Review installation instructions steps to ensure this MadJax lift kit was properly installed to the provided instructions.**

*** Increasing tire size larger than the stock 18" will increase the operating speed. Take care when maneuvering at all times.**

*** Do NOT use tire heights greater than 22" tires on this 4" lift. Exceeding tire heights larger than recommended will cause unintended speeds and performance issues.**

*** Be aware that this vehicle now handles differently. It is less stable and more sensitive to speed changes and the nature of operation.**

*** Follow all operating instructions and warnings provided.**

*** IMPORTANT: These instructions should be kept and stored in this cart for future reference on how to adjust toe/camber, brakes, and re-grease of front lift components.**

For additional assistance, call our support line 1-800-959-0852 or visit our support page @ https://www.nivelparts.com/madjax-support

ITEMS INCLUDED

- Main Suspension Assembly
- Driver Side Spindle Assembly
- Passenger Side Spindle Assembly
- Driver Side Upper A-arm Assembly
- Passenger Side Upper A-arm Assembly
- 2 Front Shocks
- Hardware Pack
- Thread Lock Adhesive

TOOLS NEEDED

- 10mm Socket
- 12mm Socket
- 14mm Socket
- 16mm Socket
- 17mm Socket
- 19mm Socket
- Ratchet
- Torque Wrench
- 12mm Wrench
- 14mm Wrench
- 17mm Wrench

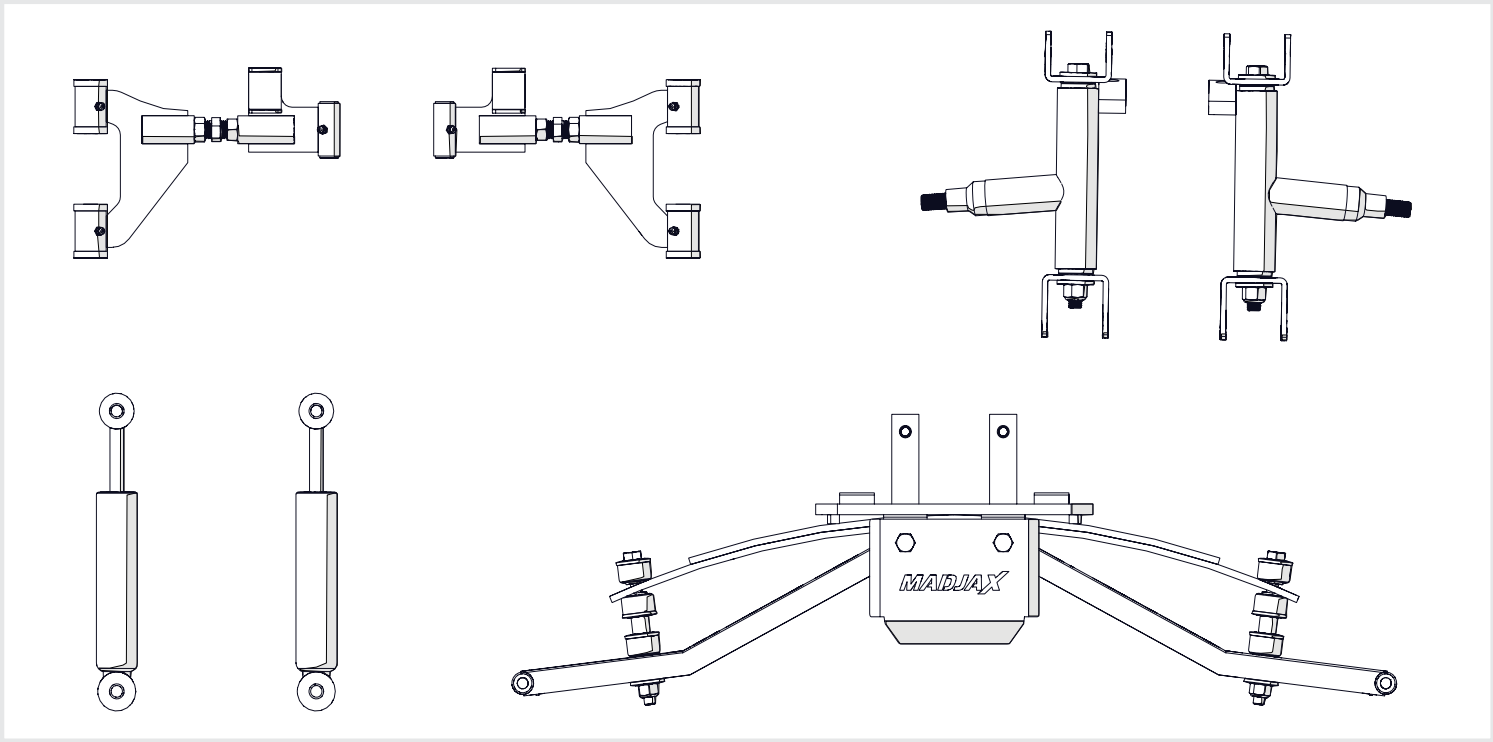

DACROMET COATED	HARDWARE	QUANTITY
FRONT SUSPENSION ASSEMBLY	M10 X 35mm HEX BOLT	2
	M10X38x105 SQUARE U-BOLT	2
	M10 FLAT WASHER	6
	M10 LOCK WASHER	2
	M10 LOCK NUT	4
SPINDLES	M10 X 80mm HEX BOLT	4
	M10 FLAT WASHER	8
	M10 NYLOCK NUT	4
FRONT SHOCKS	M8 X 60mm HEX BOLT	2
	M8 FLAT WASHER	4
	M8 NYLOCK NUT	2

Note: Instructions are shown without front cowl for instructional purposes only. Removal of cowl is NOT required.

STEP 1

19mm SOCKET

Turn the key OFF, engage the parking brake, and place the front of the vehicle on jack stands under front frame. **Ensure the jack stands are properly placed under frame to support the vehicle to avoid damage or possible injury during installation.**

Make sure the front is raised high enough to accommodate the new lift and larger tires.

Uninstall the front wheels and remove the hubs from the spindles.

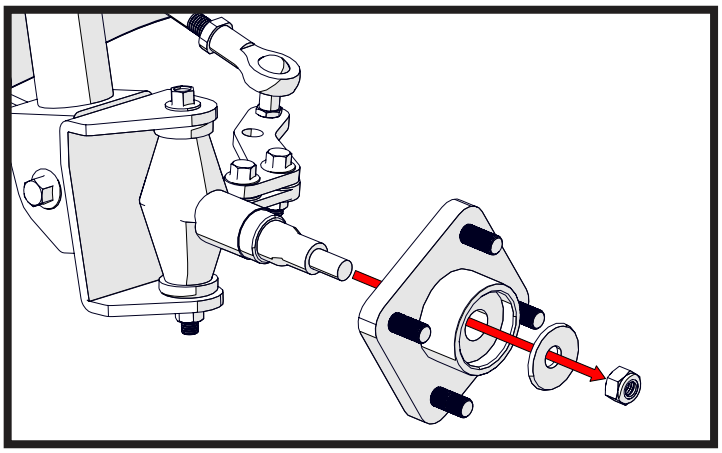

STEP 2

10mm SOCKET

Remove the front bumper with mounting brackets from the vehilce **(bumper not shown for clarity)**. Keep for reinstallation later.

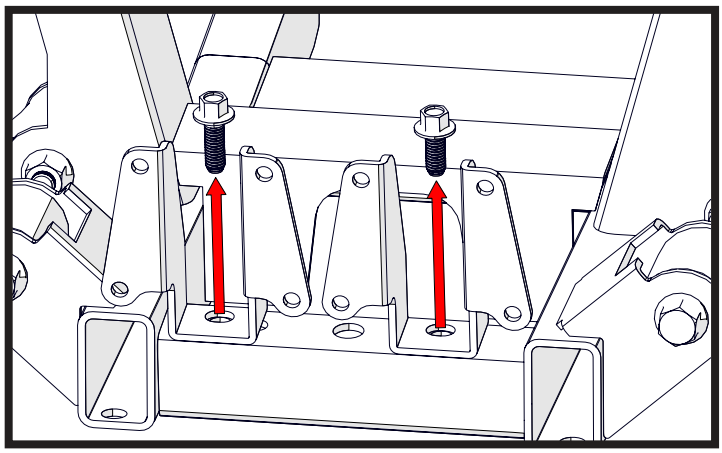

STEP 3

17mm SOCKET & WRENCH

Uninstall the steering arm from each spindle.

Retain the hardware from the steering arm.

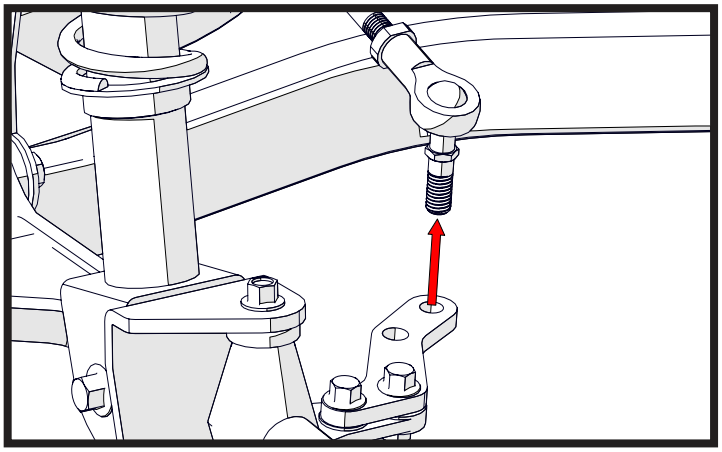

STEP 4

14mm SOCKET & WRENCH

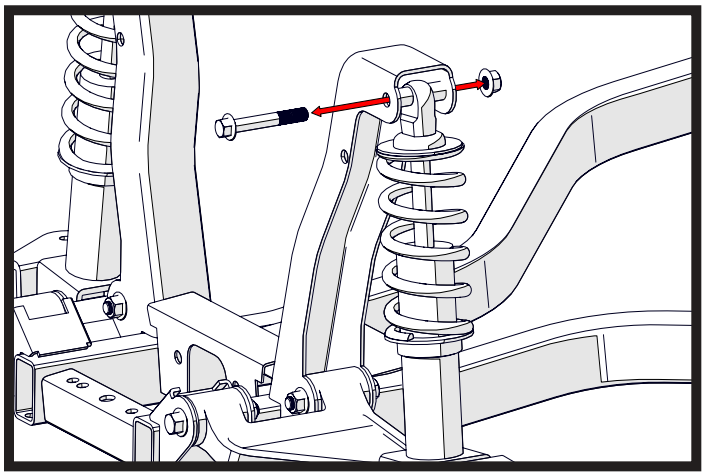

Remove the upper bolt from front shocks, keeping the hardware.

The shocks will be removed with control arms & spindles during next step.

STEP 5

14mm SOCKET & WRENCH

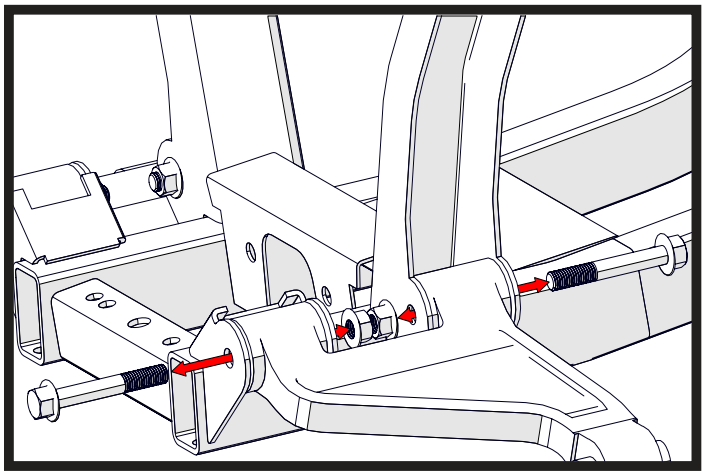

Uninstall the control arms from the vehicle frame.

Caution: Once bolts are removed the control arm and the entire factory suspension will be free from cart.

Keep control arm hardware, discard all other components.

STEP 6

17mm SOCKET

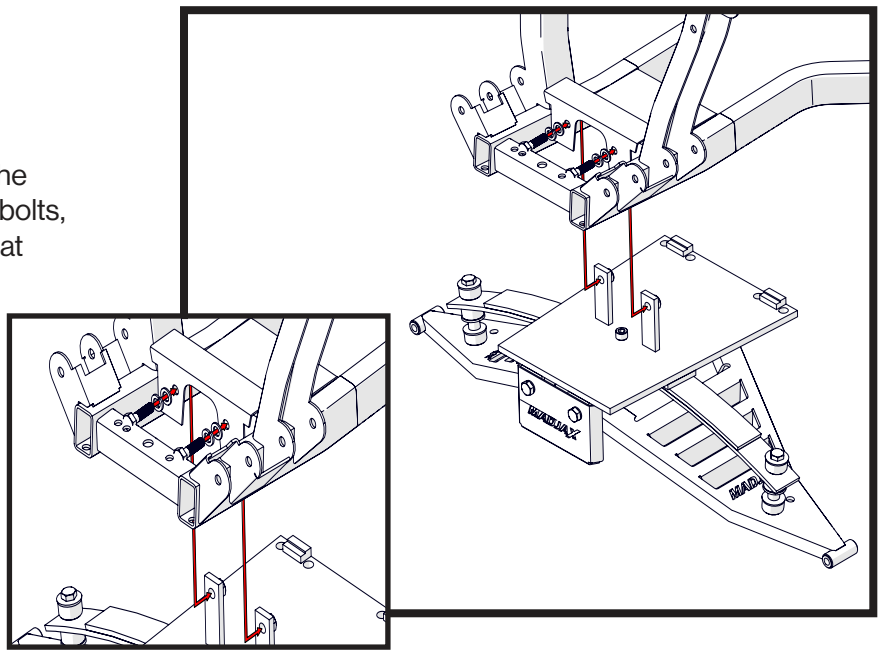

Install the **Main Suspension Assembly** to the vehicle frame using two (2) M10x35mm hex bolts, two (2) M10 lock washers, and two (2) M10 flat washers.

Do **NOT** tighten bolts until both are hand threaded into **Main Assembly.**

Snug, but do not fully tighten bolts until after next step.

NOTE: DO NOT adjust the bushing assemblies at the end of the leaf springs. These bolts are preset to the proper tightness. It will not appear tight until the weight of the vehicle is on the suspension.

STEP 7

17mm SOCKET

Using two (2) M10 U-Bolts, four (4) M10 flat washer, and four (4) M10 nylock nuts, secure the rear of the **Main Suspension Assembly** to the vehicle frame rails.

Alternate tightening the nuts until torqued to **35lb-ft (47Nm).**

Torque front mounting bolts from Step 6 to **35lb-ft (47Nm).**

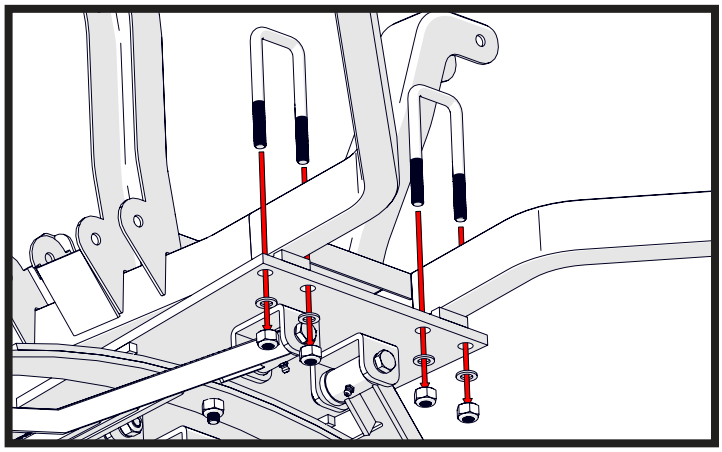

STEP 8

14mm SOCKET & WRENCH

Using the two (2) stock M8 hex bolts and nuts from Step 5, install the new **Upper A-arms** as shown and **torque to 35-43 lb-ft (48-58 Nm)**. The shock mounting bracket will be facing up and oriented to the rear as shown.

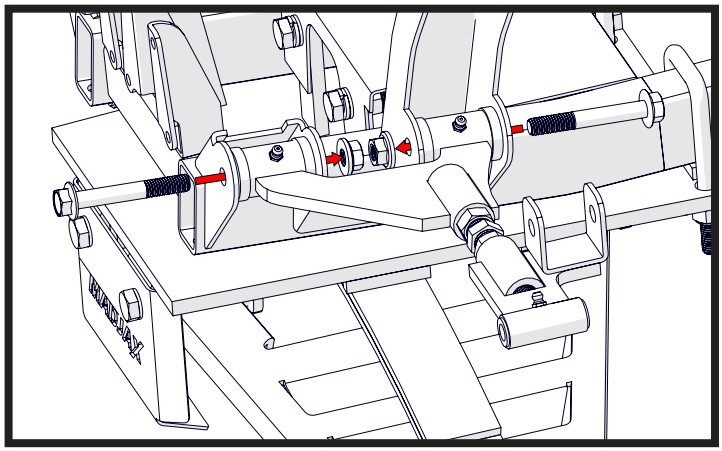

NOTE: Grease fittings of upper A-arms after installing and before the next step.

STEP 9

14mm SOCKET & WRENCH

Install the top of the new **Shocks** to the vehicle using the stock mounting bolt from Step 4. Attach the bottom of the **Shock** to the upper a-arm using two (2) M8 x 60 hex bolts, four (4) M8 flat washers, and two (2) M8 nylock nuts.

Torque hardware to 30-37 lb-ft (40-50 Nm).

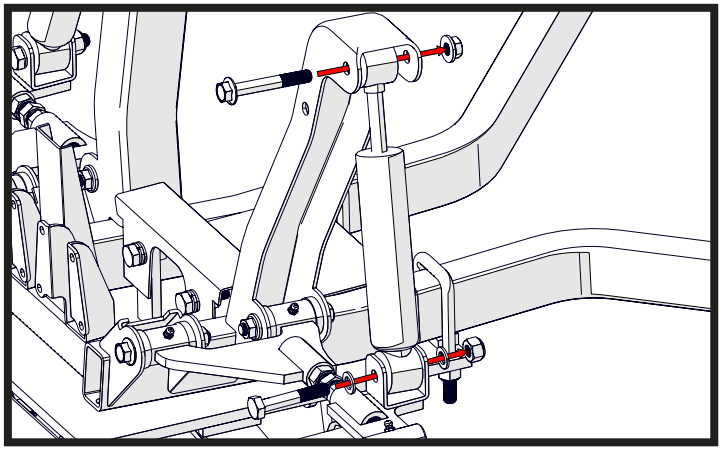

STEP 10

16mm SOCKET &
17mm WRENCH

Using four (4) M10 x 80mm hex bolts, eight (8) M10 flat washers, and four (4) M10 nylock nuts, install each **Spindle** to the upper and lower a-arms.

The steering arm of each spindle will be oriented to the rear of the vehicle and grease fitting to the rear as shown.

NOTE: Grease fittings on back side of spindles and the ends of both upper & lower a-arms before moving on to next step.

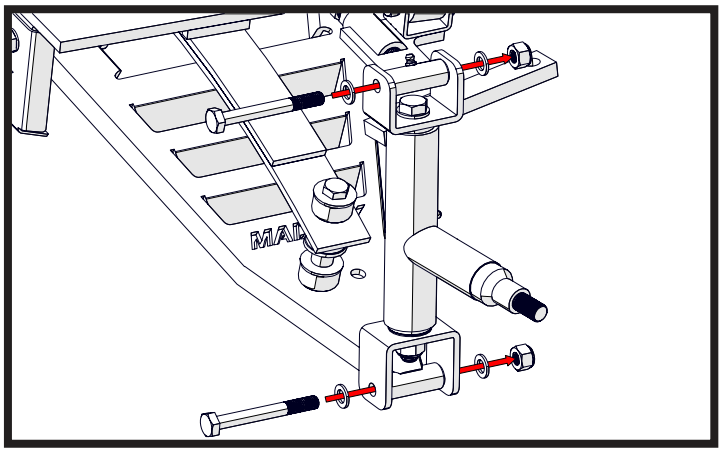

Driver's Side Shown

STEP 11

17mm SOCKET & WRENCH

Attach the factory steering arm end to the **Spindles** using hardware from Step 3.

Torque to 29 lb-ft (39 Nm).

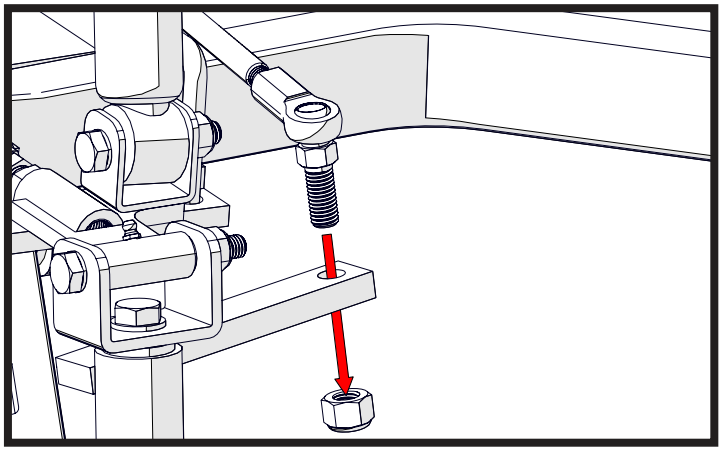

STEP 12

19mm SOCKET

Using the stock hardware from Step 1, reinstall the hubs, new wheels, and tires to the vehicle.

Torque the hub nuts to 84 lb-ft (144 Nm)

Torque the lug nuts to 65 lb-ft (88 Nm)

Remove the jack stands and lower the vehicle to the ground.

NOTE: DO NOT attempt to align or adjust toe/camber until rear lift is installed and cart has been test driven.

*** Increasing tire size larger than the stock 18" will increase the operating speed. Take care when maneuvering at all times.**

*** Do NOT use tire heights greater than 22" tires on 4" Lift Kit. Exceeding tire heights larger than recommended will cause unintended speeds and performance issues.**

STEP 13

Install the rear lift kit appropriate for the vehicle, following the installation instructions that comes with the rear kit.

For the Yamaha Drive2 with independent rear suspension, use kit **16-056**

For the Yamaha Drive (G29) or Drive2 with a solid rear axle, use kit **16-057**

ALIGNMENT & CAMBER ADJUSTMENT

STEP 1

19mm & 21mm WRENCH

Once the rear lift is installed, set the alignment of the vehicle.

On flat, level ground, use a large framing square to check and adjust the camber of each front wheel until the tire is perpendicular to the ground.

To adjust, loosen the jam nuts (21mm wrench) on each side of upper a-arm turnbuckle. Use a (19mm wrench) to turn the center of the turnbuckle in or out as needed. Continually check the camber with the framing square as you turn the turnbuckle.

Once properly adjusted, tighten each jam nut out against the upper a-arm with a 21mm wrench **(not against the center of the turnbuckle)**.

Repeat on the opposite side of the vehicle.

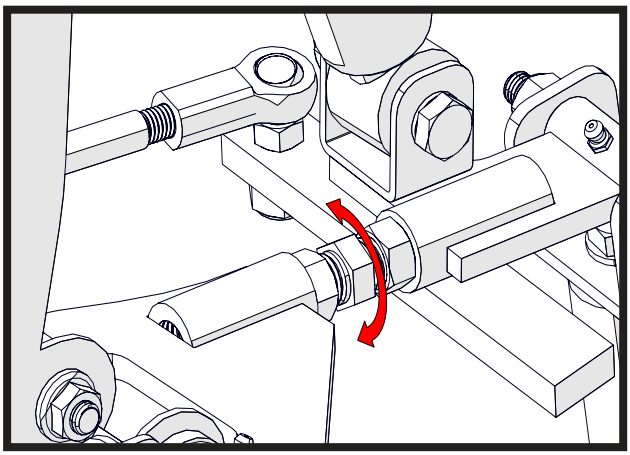

STEP 2

17mm and 12mm WRENCH

Ensure the steering wheel is straight to begin adjusting the toe of the front tires. The measurement between the center of the tread of the two front tires at the front the should be 1/8"-1/4" **shorter** than the same measurement at the back of the tires.

To adjust, loosen the jam nut on either side of each steering rack. Turn the extension to adjust in or out as needed and recheck the measurement front and back. Also, ensure that the measurement from the front of each tire to the center of the vehicle is the same on both sides and adjust accordingly.

Once the toe is corrected, tighten the jam nuts on both steering arms.

Test drive vehicle and check camber and toe measurements again. If needed, adjust accordingly and retighten all hardware. Loosen and adjust steering wheel to be straight if needed and re-tighten.

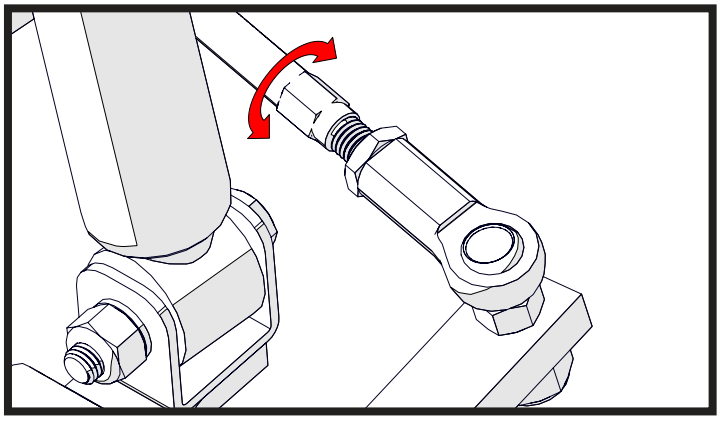

STEP 3

Place the included warning label in a highly visible area on the vehicle for all users to read before operating the vehicle (recommend foot board as shown or steering wheel).

Use the additional Warning Label provided to place in view of a well protected area such as in the battery/ motor compartment.

IMPORTANT: These instructions should be kept and stored in this cart for future reference on how to adjust toe/camber, brakes, and re-grease of front lift components.

INSTALLATION COMPLETE

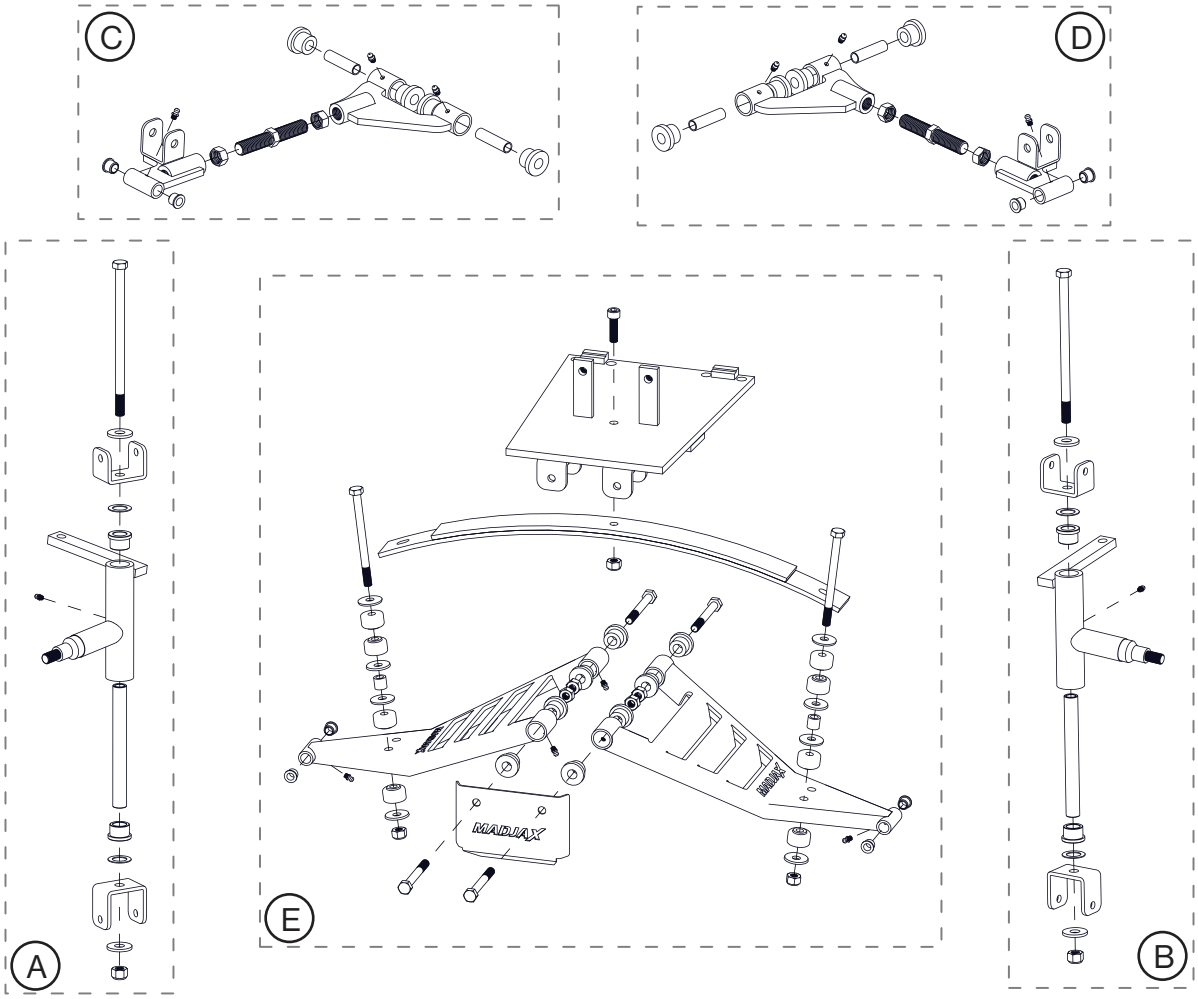

ITEM	PART NUMBER	DESCRIPTION
-	16-055-41	16-055 HARDWARE KIT
-	16-055-44	SINGLE FRONT SHOCK
A	16-055-46	PASSENGER SIDE SPINDLE ASSEMBLY
B	16-055-47	DRIVER SIDE SPINDLE ASSEMBLY
C	16-055-48	PASSENGER SIDE UPPER A-ARM ASSEMBLY
D	16-055-19	DRIVER SIDE UPPER A-ARM ASSEMBLY
E	16-055-50	MAIN FRONT SUSPENSION ASSEMBLY

Yamaha®, Yamaha® Drive®, Drive2® and G-29® are registered trademarks of Yamaha Golf-Car Company. Any reference to Club Car®, E-Z-GO®, or Yamaha® or their associated trademarks, word marks, and products are only for purposes of identifying golf carts with which this MadJax product is compatible. MadJax products are aftermarket parts and are not original equipment parts. MadJax is not connected to, affiliated with, sponsored by, or endorsed by either Textron Innovations, Inc., Club Car, Inc., Yamaha Golf Cart Company, or any of their parent or subsidiary companies.