Diversified Power International
414 Century Court
Piney Flats, TN 37686
(423) 538-9002 (423) 538-9202 (fax)
www.DPIpower.com

KYNERGY® AND INTELLIPHASE POWER® SERIES DC-DC CONVERTERS GALVANICALLY ISOLATED & NON-ISOLATED – HI-EFFICIENCY

PRODUCT MODELS:

Non-Isolated Input To Output (Isolated From Chassis) KYNERGY® Series:

10-13B020Txx	24V Input, 13V 300W Dual Output, Switched + Continuous
11-13B020Txx	24V Input, 13V 300W Single Output, Switched
10-13D020Txx	36/48V Input, 13V 300W Dual Output, Switched + Continuous
11-13D020Txx	36/48V Input, 13V 300W Single Output, Switched

Isolated Input to Output And From Chassis INTELLIPHASE POWER® Series:

12-13D020Txx	36/48Vdc Input, 13Vdc 300W Single Output, Switched
12-13D030Txx	36/48Vdc Input to 13Vdc 400W Single Output, Switched
12-13F030Txx	72Vdc Input to 13Vdc 400W Single Output, Switched

Output Connector:	xx = 08	Terminal Block Connector
	xx = 50	Deutsch Style Connector.
	xx = 55	Delphi Connector
	xx = 95	Multi-Type I/O Connector
	xx = 98	Flying Output Leads – no Connector supplied
	xx = 99	Customer Specified Special-App Connector

IMPORTANT: READ AND SAVE THIS SAFETY INSTRUCTION MANUAL.

Manual P/N: MNUL0023 Rev.5
Copyright © 2014 DPI

Table of Contents

Part	Description	Pg
1	Features	2
2	Introduction	2
3	User Safety	3
4	Personal Precautions	3
5	Installation And Mount	4
6	Operation	6
7	Troubleshooting	7
8	Wire Diagram Drawings	7
9	Mount Drill Templates	11
10	Warranty	12

Look for this symbol through out this manual. It means 'BE ALERT – YOUR SAFETY IS INVOLVED'. If you do not follow these safety instructions, personal injury or property damage may occur.

1. FEATURES

1.1. Fully Automatic – many faults such as Under Voltage conditions automatically recover once condition returns to normal.
1.2. Environmentally sealed – fully encapsulated construction provides protection from full water immersion.
1.3. Isolated models are Galvanically isolated from Input to Output from its Chassis
1.4. Non-Isolated models are Galvanically isolated from Leads to Chassis
1.5. Very high electrical energy conversion efficiency exceeding 91%, very low radiated and conducted noise emissions.

2. INTRODUCTION

- The Diversified Power International (DPI) DC-DC Galvanic Isolated DC-DC Converter series represents a design performance breakthrough allowing superior regulation over a very large input range.
- It is designed to supply power to resistive and reactive loads such as motors and Halogen Lamps (reference wiring diagrams for inductive motor load setup).
- A Keyed Switch Input allows operation setup from the primary battery side and implements functions such as 'Ignition Key' or Winch Motor activation.

CAUTION: Incorrect or marginal wiring practices such as loose wire to wire connections / crimps, omitted fusing at battery terminals and poor connector crimp terminations may result in equipment and/or property damage, or worse – personal injury. Defer installation to qualified electricians. Failure to follow mounting installations may void warranty – Refer to 'Installation And Mount' Section.

3. USER SAFETY OPERATIONS GUIDE

WARNING: RISK OF EXPLOSIVE GASES. WORKING WITH RECHARGEABLE BATTERIES IS DANGEROUS. EXPLOSIVE GASES DEVELOP DURING NORMAL BATTERY OPERATION. READ THIS MANUAL EACH TIME AND MAKE CERTAIN YOU FULLY UNDERSTAND IT AND FOLLOW THE SAFETY AND OPERATING INSTRUCTIONS AT ALL TIMES.

3.1. To reduce risk of battery explosion, follow all safety instructions below and those published by the battery manufacturer. Review cautionary markings on vehicle or equipment containing the battery.

3.2. DC-DC Converter contains no serviceable parts. If it fails during its warranty period, contact your dealer for a warranty replacement or refer to last page of manual for replacement procedure.

3.3. Construct cabling using DPI Approved and DPI supplied Connector Housing and Connector pins and sockets.

3.4. The use of undersized conductors is STRICTLY prohibited. Ensure that any wiring added to the input or output can safely carry the DC Current expected. Plan to use wire gauges sufficient to carry input Currents of 15Amps typical and output currents of 30amps typical. Wire and Cables must meet Automotive and UL and/or CSA standards and routed to avoid being tripped over and not subjected to damage or stress. Extension cables must be properly wired and in good electrical condition, and large enough for the Ampere rating of the DC To DC Converter Product as specified in the following TABLE:

RECOMMENDED MINIMUM AWG SIZE FOR WIRE AND CABLE

For 16A Input and for cable up to 25ft:	Use 14Ga minimum
For 16A Output and for cable up to 25ft:	Use 14Ga minimum
For 30A Output and for cable up to 25ft:	Use 10Ga minimum

3.5. If Branch Circuit Wiring supplies multiple loads, such as that used from a Fuse Block or Fuse Box, refer to the National Electrical Code (NEC) for wire gauges appropriately sized to carry the load currents.

4. PERSONAL PRECAUTIONS While Working With Batteries

4.1. Have someone within range of your voice to come to your aid if needed.

4.2. Have plenty of fresh water and soap nearby in case battery acid contacts your skin, clothing or eyes. Wear eye & clothing protection & avoid touching eyes.

4.3. If battery acid contacts skin or clothing, wash immediately with soap and water.

4.4. If acid enters eye, immediately flush eye with running cold water for at least 10 minutes. Get medical attention immediately.

4.5. NEVER smoke or allow a spark or flame in vicinity of battery.
4.6. Be extra cautious not to drop a metal tool onto battery. It might spark or short circuit battery or other electrical part that may cause an explosion.
4.7. Remove personal metal items such as rings, necklaces, watches, etc. Batteries can produce a short circuit current high enough to weld such items causing a severe burn.

5. INSTALLATION

WARNING: NEVER connect loads to connection points in-between battery interconnects such as those that connect one battery to the next because it will cause the battery pack to become unbalanced and dangerous to use. Always connect DC-DC Converter across the entire Battery Pack – refer to 'Correct / Incorrect Wiring Diagram Drawing'.

5.1. Installation should be performed by a Qualified Electrical Technician trained and certified to work with Automotive and Mobile Equipment or vehicles.

5.2. Description of Wire Colors and Connection if supplied with Wire Leads
5.2.1. Input Wires:
Blue: Battery Positive
Yellow: Battery Negative
White: Ignition Key – if tied (shorted) to Battery Positive, Converter output will energize (ON). If left floating, or shorted to Battery Negative, Converter output will de-energize (OFF).
5.2.2. Output Wires:
Red: +13Vdc Output Load Positive
Black: - Negative Load Return
5.3. If supplied with Connector, refer to Wire Diagram Drawings.

5.4. Refer to the Mount Drill Templates Section for drill-hole diameters. Mount surface MUST be clean of all grease, grime and all debris. Use of a thermal transfer compound is recommended – apply a thin layer to the mounting area prior to laying the Converter into place. **Figure-A Mounting Voids Warranty.**

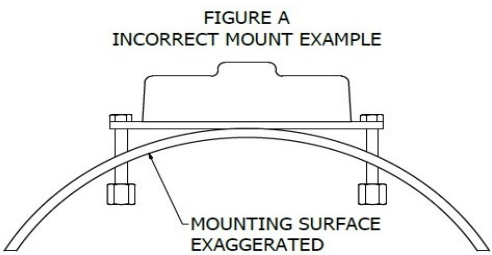

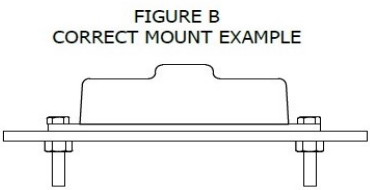

5.5. Ensure Vehicle Ignition Key is off and turn Battery Disconnect off so that the Battery Pack is completely disconnected from Vehicle and loads. If a disconnect switch is not available, disconnect Positive and Negative Cables from Battery Pack. Confirm disconnection by checking with a voltmeter from frame to positive and negative battery terminals. If not familiar with the use of voltmeters: STOP Installation, and refer service to a Qualified Electrical Technician.

5.6. Using a Voltmeter and Ohm-meter, check and verify all wiring connections in accordance with Wiring Diagram Drawing used.

WARNING: PROPER FUSING MUST BE INSTALLED BY USER. On cables constructed to run from Battery Positive (+) Terminal to the Converter Positive(+) input, a Waterproof Automotive Grade in-line Fuse holder must be installed within 6inches (15cm) from Battery Positive (+) Terminal. On the cable constructed to run from the Converters High Output Positive (+) terminal to the electrical load(s), install a Waterproof and Automotive Grade in-line Fuse holder and place this fuse holder within 6inches (15cm) of the Converter Terminals Positive (+) output. For every output circuit originating from the output of the Converter, the installer must ensure that EACH CIRCUIT is fitted with its own Fuse where the fuse is properly rated to protect the load that it services.

WARNING: Wire connections to Connector Pins and Fuse Holder Connect terminals must be BOTH crimped and soldered to assure mechanical AND electrical bondage. 30 amp currents are Welding Current Levels and improper connections may result in heat points, fire and/or permanent equipment / property damage and/or worse: personal injury.

CAUTION: Using Ohm Meter, check for wiring to chassis shorts, and wiring to wiring shorts. Also check all nut and bolt fasteners (if any used) for tightness of connections and ensure that these connections have been properly protected from environmental exposure with the use of grease or similar materials. <u>Check and Confirm</u> polarity of output wiring prior to making any connections to electrical loads.

5.7. Ensure all electrical loads are disconnected from Converter's output. Enable Battery Pack Disconnect Switch and/or reconnect Battery cables back to Battery Pack Terminals to apply power to the converter.

5.8. Converter relies on conduction of heat to ambient air. An unpainted metal surface of 36sq.in. and unobstructed air flow is required for maximum output.

5.9. Enable the converter by engaging the Ignition Key Switch. Using a voltmeter, check and confirm output voltage from Converter High Power Output Channel is 13.0Vdc +/-0.5V and that the polarity of the output is correct. Connect electrical loads and verify operation of these loads.

5.10. If 'UNSWITCHED' operation is desired – meaning that the output of the Converter is always energized (ON), permanently short the White Ignition Wire to the Blue Input Battery Positive Connected Wire.

5.11. Some models supply a Dual Output Function where one output is continuous enabled while a second output is switched. Load power is shared between both outputs such that each output can produce up to the maximum rating of the converter, as long as the TOTAL output power does not exceed the maximum rating.

6. OPERATION

6.1. Input Ignition Key:

6.1.1. A SPST Switch serves as an ignition key. When the Key is in the 'ON' or shorting position, the Converter output is energized (ON). When the Key is in the 'OFF' or open position or left floating (un-terminated), the output is de-energized (OFF).

6.1.2. The ignition key is a SPST type switch that connects the White Ignition Key Input Wire to the Blue Input Battery Positive Wire. Alternately, if the intent is to operate the Converter continuously without switching the Converter Output, the White Ignition Key Input Wire should be shorted or permanently connected to the Blue Input Battery Positive Wire.

6.2. When referring to Wiring Diagram Drawings:

6.2.1. 'B+' and 'B-' are Battery Positive and Negative inputs, respectively.

6.2.2. 'Enable' is also synonymous with 'Input Ignition Key'. This input, when pulled to 'B+', activates the 'Switched Output'.

7. TROUBLESHOOTING GUIDE

7.1. Converter has no accessible user serviceable parts due to environmental sealing.

7.2. If electrical loads are not operating:

- Check that the load is functional and not defective
- Check all fusing, check for blown or open fuses
- Check wiring for breaks
- Check all Connectors, Wire Terminating Terminals, and/or Wire-Nuts for clean connections, void of all corrosion
- Check all interconnect wiring points such as crimps

8. WIRING DIAGRAM DRAWINGS

TYPICAL CONNECTOR TYPE, PIN-OUT AND CONNECTION CHART

	Application:	300W	400W EZgo 48v	400W Club-Car 48V 20A		400W Club-Car 48V 30A		400W EZgo 72V	
	Typical P/N:	10-13D020T50	12-13D030T55	12-13D020T50		12-13D030T55		12-13F030T55	
	Series Type:	Non-Isolated	Isolated	Isolated		Isolated		Isolated	
	MANUFACTURER:	Deutsch	Delphi	Deutsch		Delphi		Delphi	
	Description:	6-Pin Square	5-Pin Oblong	3-Pin TriAngle	2-Pin Rect.	3-Pin Rnd	2-Pin Oval	3-Pin Oval	2-Pin Oval
	HOUSING:	DTF13-6P	12186400	DT04-3P	DTP04-2P	15344628	12065863	15300003	12065863
	PIN OR SOCKET:		12129497	0460-202-16141	0460-204-12141	12065196	12059897	12129497	12065197
SIGNAL NAME	Wire Color								
Battery I/P Positive:	BLUE	1	A(1)	A(1)		A(1)		A(1)	
Battery I/P Negative:	YELLOW	6	B(2)	B(2)		B(2)		B(2)	
Ignition I/P Switch:	WHITE	2	C(3)	C(3)		C(3)		C(3)	
Positive O/P Un-Switched:	ORANGE	4							
Positive O/P Switched:	RED	5	D(4)		B(2)		B(2)		B(2)
Output Power Negative:	BLACK	3	E(5)		A(1)		A(1)		A(1)
		PIN OR SOCKET NUMBER DESIGNATORS FOUND ON CONNECTOR							

IMPORTANT!!:

- If converter uses built in connector, such as the 300W Non-Isolated Series, Wire Colors are not relevent.
- Connector 'Housing' and 'Pin Or Socket' information is provided to allow the user to properly select an appropriate mating Connector and mating Pin or Socket. It is the responsibility of the user to properly select an appropriate mating Connector based on user wire guage and load side circuit design, fusing and other conditions.
- Due to Connector Manufacturer changes beyond DPI's control, user must contact DPI and/or Connector Manufacturer for updated corrections and changes which may affect application.

ISOLATED CONVERTER SERIES

TYPICAL WIRING CONNECTION DIAGRAM

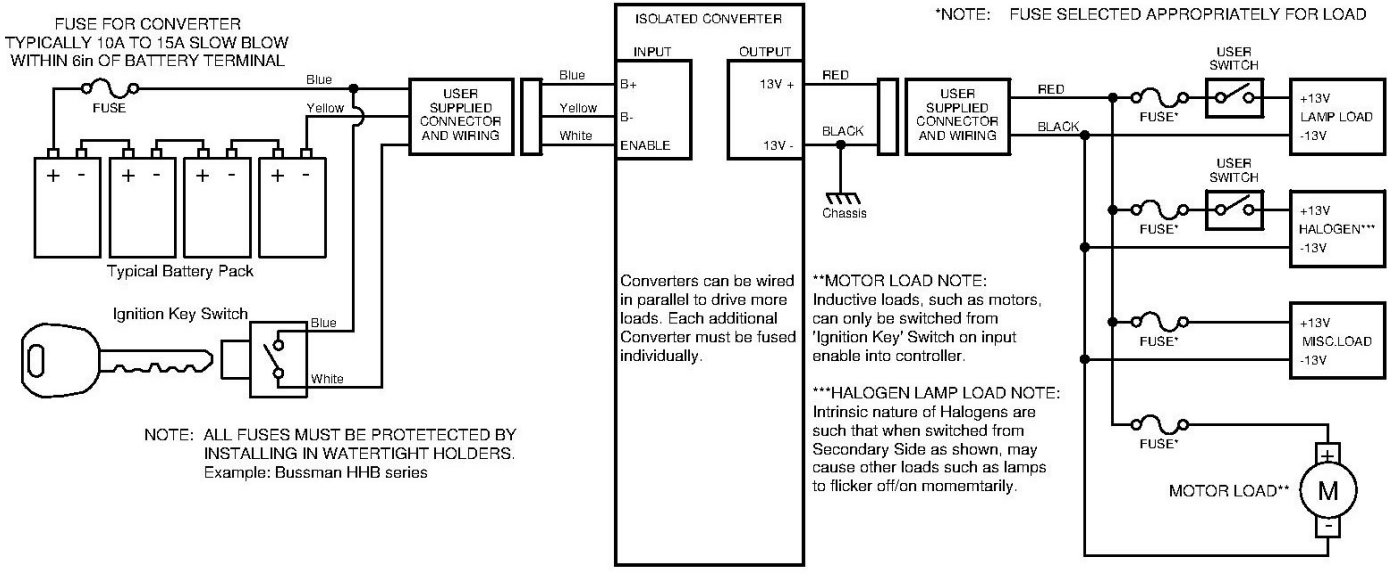

NON-ISOLATED CONVERTER SERIES

TYPICAL WIRING CONNECTION DIAGRAM (6-PIN CONNECTOR)

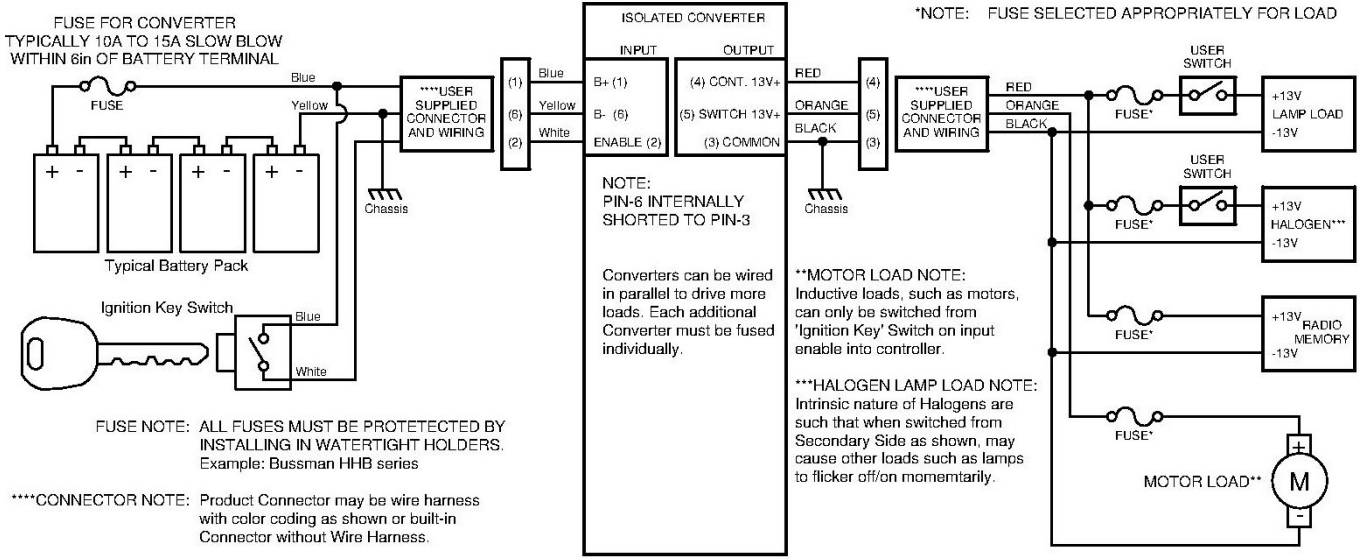

FUSE NOTE: ALL FUSES MUST BE PROTETECTED BY INSTALLING IN WATERTIGHT HOLDERS. Example: Bussman HHB series

****CONNECTOR NOTE: Product Connector may be wire harness with color coding as shown or built-in Connector without Wire Harness.

Correct / Incorrect Wiring

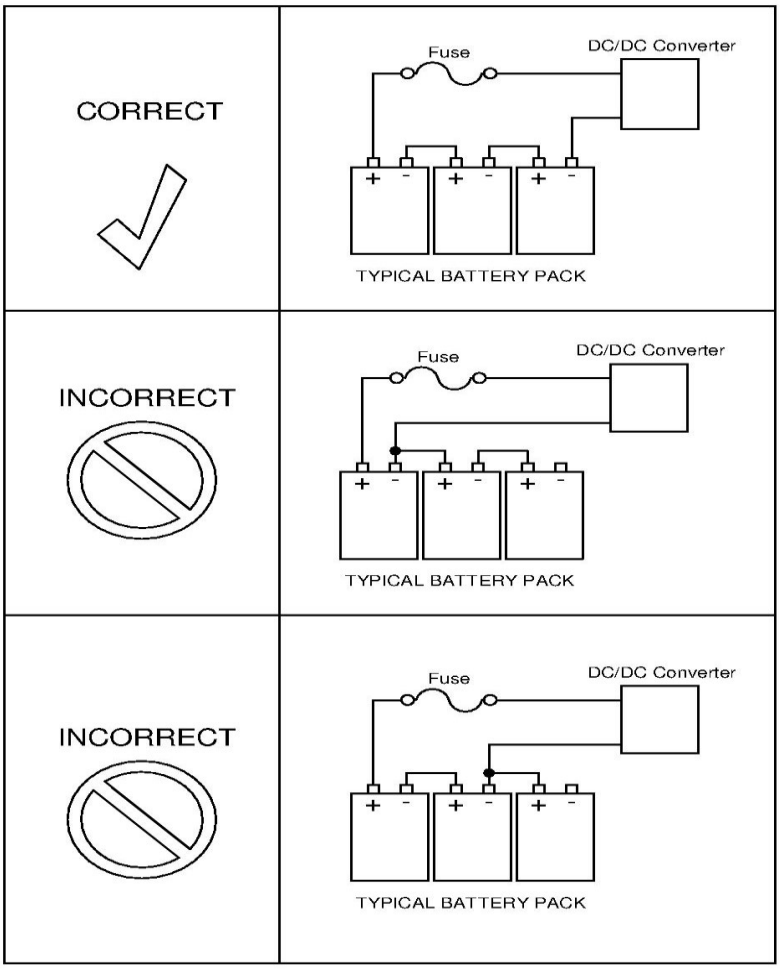

<u>IMPORTANT: CONVERTER IS NOT A BATTERY CHARGER AND DOES NOT CONTAIN A BACKFEED DIODE PROTECTOR.</u>

IF THE BATTERY CONNECTED TO THE CONVERTER INPUT FALLS BELOW THE VOLTAGE OF THE BATTERY CONNECTED TO THE OUTPUT, THE CONVERTER'S INPUT FUSING WILL OPEN CAUSING A PERMANENT NON-WARRANTY CONDITION. INSTALLATION OF A BACKFEED DIODE IN THE INPUT OR IN THE OUTPUT CIRCUIT IS MANDATORY SHOULD THE INSTALLATION REQUIRE CHARGING A BATTERY. REFER TO A QUALIFIED AND KNOWLEDGEABLE INSTALLER WHO IS FAMILIAR WITH SIZING A BACKFEED PROTECTION DIODE OR CALL US TO SUPPLY YOU WITH AN APPROPRIATE BACKFEED DIODE KIT. When using a Solar Panel for Input, ensure the solar panel uses a Backfeed diode protector.

MOUNT DRILL TEMPLATES

ISOLATED CONVERTER DRILL TEMPLATE

Note: Base Plate Design is intentionally sized to allow for a Drop-In Replacement mounting into Club Car 2-hole mount pattern.

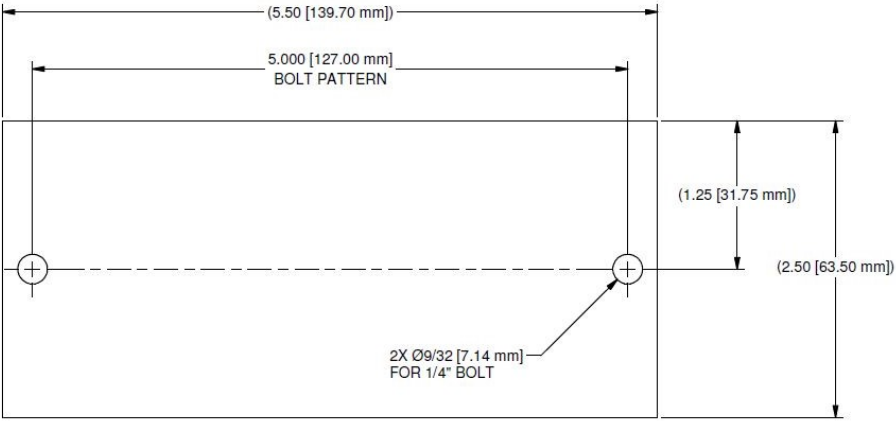

NON-ISOLATED CONVERTER DRILL TEMPLATE

Note: DPI's 2-Hole Base Plate Design intentionally sized to allow Drop-In Replacement mounting into many competitors' two or four or six-hole mounting patterns.

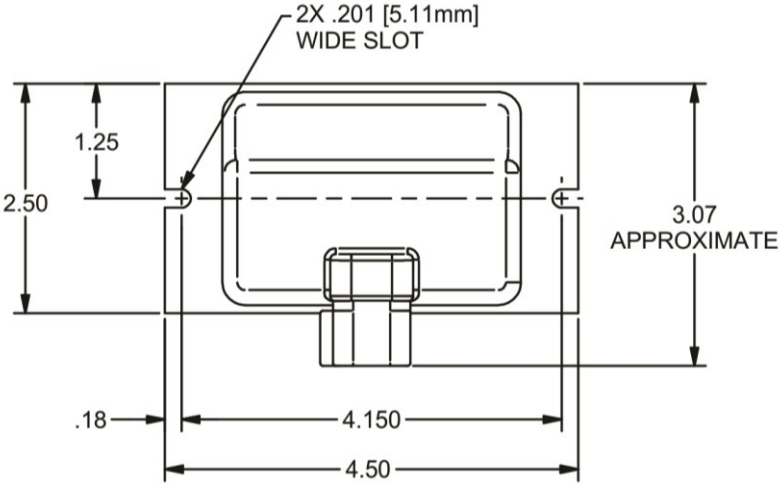

10 WARRANTY

Diversified Power International LLC (DPI) warrants exclusively to the original purchaser that this product will be replaced or repaired, at DPI's option, if it fails during the first 2 years after date of purchase due to a defect in material or workmanship or 3000 hours of operation (internal time keeping mechanism employed). In order for a claim to be processed the product must be returned to DPI (i) with all transportation charges prepaid, (ii) accompanied by a acceptable proof of purchase, and with a Return Material Authorization (RMA) number, previously obtained from DPI, printed and clearly visible on the outside of the shipping container. This warranty does not apply if the product has been modified, abused, **mounted onto a curved surface causing physical product damage** or improperly or negligently used, connected, maintained, or operated in any manner contrary to the instructions stated in this manual or in addition to instructions which may be affixed to the product's enclosure. Repair or replacement as provided under this warranty is the exclusive remedy of the purchaser, and the purchaser shall have no claim against DPI except for the breach of an express warranty stated herein. DPI shall not be liable for any incidental, consequential, or special damages for breach of any expressed or implied warranty. Except to the extent required by applicable law any implied warranty of merchantability or fitness for a particular purpose is limited in duration to the first two (3) years or 3000hrs of operation, after the date of purchase. Some states do not allow the exclusion or limitation of incidental or consequential damages or allow limitations on how long an implied warranty lasts, so the above limitations or exclusion may not apply to you. This limited warranty gives you specific legal rights, and you may also have other rights which vary from state to state. Apart from the warranties set forth above, dpi makes no other warranty, express or implied, with respect to the suitability or merchantability of this product, the fitness or this product for any specific use or purpose, or any other matter pertaining to this product.

Return information:

DIVERSIFIED POWER INTERNATIONAL LLC
414 CENTURY COURT
PINEY FLATS, TN 37686, U.S.A.
423 538-9002
RMA # _____

For further information, product updates, technical information, or general inquiries, please visit our web site at:

www.DPIpower.com